Occupant Response in Frontal, Oblique and Side Impacts in Highly Automated Vehicles Environment

Bronislaw D. Gepner, Katarzyna Rawska, Jason R. Kerrigan

I. INTRODUCTION

In recent years, advance driver-assistance systems (ADAS) have seen rapid development and implementation in new vehicles. These systems, when used as intended, have the capability to improve vehicle safety and reduce the number and severity of vehicle crashes [1-3]. It is expected that in the near future, ADAS functionality will allow occupants to ride without constantly interfacing with the vehicle's controls, effectively resulting in a level 3 autonomous vehicle, or automated driving system (ADS) [4-6]. Consequently, the occupants will no longer be constrained to traditional seating postures.

It is expected that the greatest near-term changes will include occupants choosing to recline their seats and moving them away from the knee bolster (KB) to rest during periods where autonomous mode is engaged. However, the influence of these seating choices on occupant safety is yet to be thoroughly investigated. There are few studies focusing on occupant kinematics and restraint performance in reclined postures [7-13]. While the previous studies included the effect of occupant anthropometry, covered a wide range of restraint systems and interior configurations, they considered only a frontal crash scenario.

The goal of this study was to evaluate the response for reclined occupants in additional crash scenarios across variations in occupant anthropometry, recline angle and the KB position. The specific goal was to provide a general overview of occupant and restraint system responses across various conditions. This was accomplished using the family of the Global Human Body Models Consortium (GHBMC) simplified human body models (HBM), i.e. mid-sized male, large male, and small female, subjected to 62 km/h movable deformable barrier (MDB) side impact (SINCAP) and to 90 km/h oblique movable deformable barrier (OMDB) impact simulations in a finite element (FE) model of a generalized vehicle interior.

II. METHODS

Overview

The vehicle environment used in this study included a previously developed FE model based on the prototype vehicle model provided by the original equipment manufacturer (OEM). The original vehicle model was modified through implementation of the seatback integrated 3-point seatbelt system with lap-belt pre-tensioner, shoulder-belt retractor pre-tensioner and force limiter. Additionally, the seatback was reinforced with a lattice of beam elements to provide appropriate structural support for the loads expected from the seatback integrated restraint system. Finally, the KB was decoupled from the vehicle interior to facilitate rapid and parametric interior configuration adjustment [11-13]. All simulations were performed with the occupant seated in the right front passenger seat, with generic passenger (PAB), side (SAB) and inflatable curtain airbag (IC) subjected to a US-NCAP standard 62 km/h, 27 deg. crabbed angle, side MDB or US-NCAP proposed 90 km/h, 15 deg. 35% overlap OMDB crash pulse (Fig. 1). The results were compared with the previously published data obtained for the US-NCAP standard full width frontal 56 km/h pulse [11, 13].

DOE

A full factorial design of experiments (DOE) was performed with respect to the parameters, including pulse, occupant anthropometry, seatback recline and KB position. Three different occupant anthropometries were considered: small female (F05), midsize male (M50) and large male (M95). Four different recline angles: 0 deg, 10 deg, 20 deg and 30 deg. Four KB positions: forward-track (fIP, +120 mm), mid-track (sIP, 0 mm) and back-track (bIP, -120 mm), and one position when the KB is removed from the vehicle (nIP, -450 mm) (Fig. 2). The

B. Gepner (e-mail: bgepner@virginia.edu; tel: +1-434-297-8046) is a research scientist, K. Rawska is a research specialist and J. R. Kerrigan is an Associate Professor in Mechanical and Aerospace Engineering at the Center for Applied Biomechanics at the University of Virginia, USA.

distance between the occupant and the KB was adjusted by moving the entire KB assembly relative to the vehicle frame. This was done to isolate the effect of the KB's position without altering any other restraint components, such as belt anchorage position, or the distance to the PAB. Since midsize male and large male did not fit into the seat with the forward KB position, these conditions were removed from the simulation matrix. Consequently, the DOE resulted in a total of 120 FE simulations (Table I).

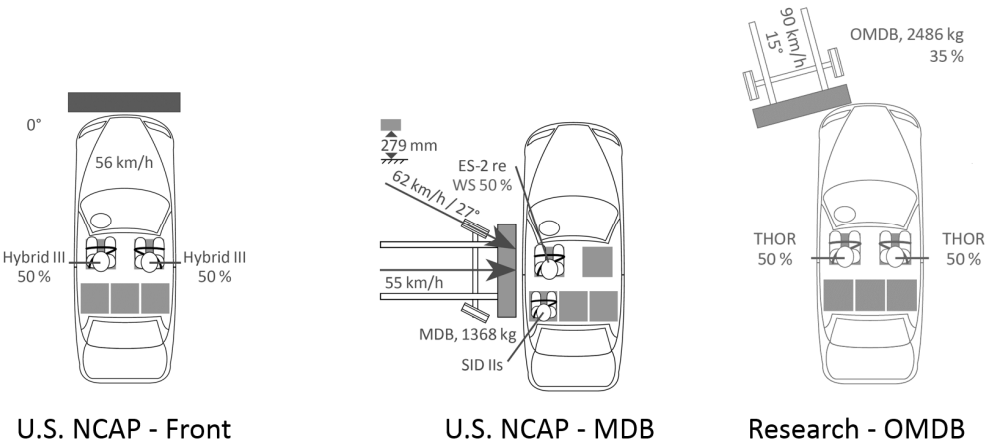

Fig. 1. Crash pulse scenarios selected: (a) US-NCAP 56km/h full width frontal [13], (b) US-NCAP 62 km/h, 27 deg. crabbed angle MDB impact (c) US-NCAP proposed 90km/h OMDB (Current study) [14].

All simulations were run for a target of 150 ms. The airbag presence was adjusted depending on the crash test mode. For frontal simulations, only PAB was used [11, 13]. For the OMDB simulations, PAB and IC were activated at t= 8 ms and at t=5 ms respectively The side impact simulations were run with a SAB and IC, which were deployed at t=5 ms. For the OMDB simulations, the original crash test pulse y-axis input was inverted to simulate the right (passenger) side impact. The side impact simulations were performed from a left side, without centre console, as well as any deformation input for the vehicle side structure.

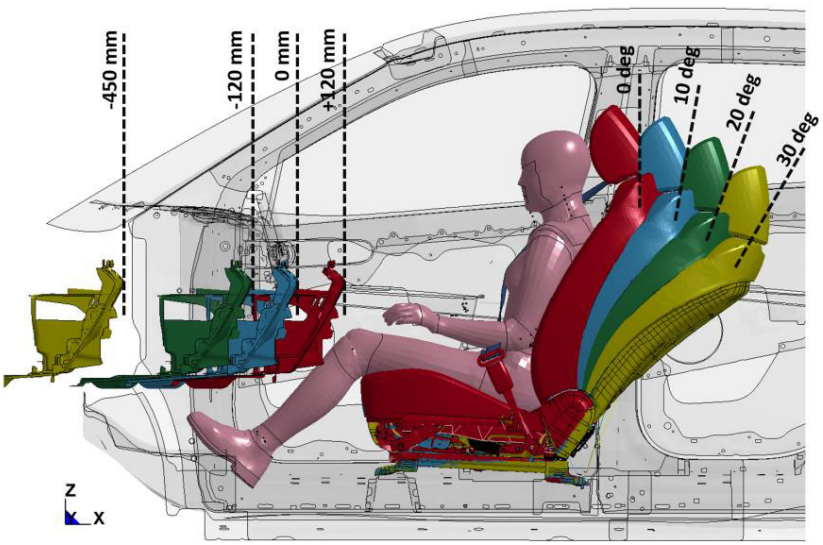

Fig. 2. Simulation environment. Investigated seatback recline angles (0 deg, 10 deg, 20 deg, 30 deg) and knee bolster positions: fIP (+120 mm), sIP (0 mm), bIP (-120 mm) and nIP (-450 mm) [11].

Simulation setup

All occupant models were positioned in the vehicle seat following the methodology described in [13]. Additionally, care was taken to ensure that occupant's pelvis was positioned as close as possible to the seatback, thus avoiding unnecessary slouching that could lead to unfavourable belt placement and consequently submarining. The HBM and seat stress and strain data were carried through the positioning phase to the final simulations in order to achieve proper boundary conditions and contact initiation. The seat belts were fitted individually for each occupant size and each seat recline angle.

Software and hardware used

All of the simulations in this study were performed using LS-DYNA (R9.1.0) explicit FE solver and the high-performance computational cluster (Intel Xeon E5-2670v2, 2.5 GHz, 20 core). In order to eliminate decomposition performance variability, all jobs were run using two computational nodes.

III. INITIAL FINDINGS

The SINCAP crash scenario proved to be most stable out of all considered scenarios, with the highest average completion time for all three HBMs. The OMDB simulations were the least stable, with only a few running to completion and with the lowest average termination time. Considering the individual HBM, the M50 model was the most stable, followed by the M95 and then the F05. This was true for all crash scenarios. Average termination time decreased with the increase in seatback recline angle (Table I).

TABLE I

SIMULATION MATRIX WITH TERMINATION TIMES FOR ALL 120 SIMULATIONS

		Termination Time (ms)																Avg. term. time (ms)
Seat recline angle [deg]		0.9				10.9				20.9				30.9				
IP position		fIP	sIP	bIP	nIP	fIP	sIP	bIP	nIP	fIP	sIP	bIP	nIP	fIP	sIP	bIP	nIP	
Frontal (56kph)	F05	150	150	150	103	150	150	150	150	83	76	111	119	91	91	80	84	113
	M50	-	150	111	150	-	150	150	150	-	150	150	72	-	86	150	76	127
	M95	-	150	150	150	-	150	90	82	-	150	90	84	-	150	97	88	116
OMDB (90kph)	F05	150	72	92	72	70	70	150	150	88	74	82	92	92	70	95	72	91
	M50	-	142	94	86	-	78	136	150	-	150	150	150	-	60	84	68	110
	M95	-	150	150	80	-	78	150	78	-	150	150	82	-	82	82	64	104
SINCAP (62kph)	F05	150	150	150	150	150	150	150	150	150	80	80	150	90	82	150	150	131
	M50	-	150	150	150	-	150	150	150	-	150	107	150	-	101	113	101	134
	M95	-	150	150	150	-	86	150	150	-	150	150	150	-	150	70	70	130
Avg. term. time (ms)		133				131				119				95				

The frontal and OMDB scenarios were evaluated in terms of occupant engagement with the seatbelt. Small occupant was the most likely to submarine under the lap belt, with F05 model submarining in all conditions except for the nominal, upright (0.9 deg) recline angle. The occurrence of submarining decreased with the increase of occupant size and proximity to the KB. The OMDB scenario increased the occurrence of submarining, with the M50 and M95 models submarining in cases that showed a good lap-belt engagement in the frontal scenario (Table II).

TABLE II

NO-SUBMARINING (0) VERSUS SUBMARINING (1) FOR FRONTAL AND OMDB SCENARIOS

		Submarining occurance															
Seat recline angle [deg]		0.9				10.9				20.9				30.9			
IP position		fIP	sIP	bIP	nIP	fIP	sIP	bIP	nIP	fIP	sIP	bIP	nIP	fIP	sIP	bIP	nIP
Frontal (56kph)	F05	0	0	0	0	1	1	1	1	1	1	1	1	1	1	1	1
	M50	-	0	0	0	-	0	0	0	-	0	1	1	-	1	1	1
	M95	-	0	0	0	-	0	0	0	-	0	0	0	-	0	1	1
OMDB (90kph)	F05	0	0	0	0	1	1	1	1	1	1	1	1	1	1	1	1
	M50	-	0	0	0	-	0	1	1	-	1	1	1	-	1	1	1
	M95	-	0	0	0	-	0	0	0	-	0	0	0	-	1	1	1

The SINCAP scenario was evaluated in terms of shoulder-belt retention and lateral head excursion. The smallest occupant (F05) maintained the shoulder-belt engagement for all considered conditions. The shoulder-belt engagement decreased with the increase of occupant size and increase in recline angle. The lateral head excursion increased with the increase of occupant size and increase in recline angle. There was no meaningful difference in lateral head excursion and shoulder-belt retention with respect to the KB position used (Table III and Table IV).

TABLE III

SHOULDER-BELT RETENTION (0) VERSUS SHOULDER-BELT SLIP OFF (1) IN THE SINCAP SCENARIO

		Shoulder Belt Retention															
Seat recline angle [deg]		0.9				10.9				20.9				30.9			
IP position		fIP	sIP	bIP	nIP	fIP	sIP	bIP	nIP	fIP	sIP	bIP	nIP	fIP	sIP	bIP	nIP
SINCAP (62kph)	F05	0	0	0	0	0	0	0	0	0	0	0	0	0	0	0	0
	M50	-	1	1	1	-	1	1	1	-	0	0	0	-	0	0	0
	M95	-	1	1	1	-	1	1	1	-	1	1	1	-	1	n/a	n/a

TABLE IV

LATERAL HEAD EXCURSION IN THE SINCAP SCENARIO

		Head Lateral Excursion															
Seat recline angle [deg]		0.9				10.9				20.9				30.9			
IP position		fIP	sIP	bIP	nIP	fIP	sIP	bIP	nIP	fIP	sIP	bIP	nIP	fIP	sIP	bIP	nIP
SINCAP (62kph)	F05	-407	-405	-405	-405	-209	-209	-209	-209	-215	-213	-213	-214	-203	-204	-206	-206
	M50	-	-560	-560	-566	-	-248	-286	-286	-	-209	-222	-222	-	-212	-212	-212
	M95	-	-617	-605	-605	-	-279	-286	-286	-	-261	-265	-282	-	-337	-238	-238

IV. DISCUSSION

This study provides an overview of occupant responses in multimodal test environment relevant to the future of personal transportation. The results show that the current HBMs perform best in the conditions that cover their development and validation regime (upright occupant with KB in frontal impact). This is not surprising given that they were developed to be used in such an environment. However, when used outside the development regime (recline, OMDB), their stability decreases.

The initial results indicate that current state-of-the-art restraint systems will require additional research and development if they are to offer an adequate level of occupant protection in the future ADS environment. Of particular concern is the protection against submarining for reclined postures. All occupants were more likely to submarine with the increase of seatback recline, however each occupant had a different submarining threshold. The smallest occupants were most likely to submarine. When submarining was observed for larger occupants, it was at higher seatback recline angles. This suggests that the occupant size, and consequently pelvis size and pelvis orientation, may play a role in influencing occupant propensity to submarine (Table II).

The KB was an effective measure controlling occupant's pelvis motion. The shorter the distance to the KB, the fewer submarining cases were identified. This suggests that the KB could be an effective countermeasure for controlling occupant kinematics and reducing submarining likelihood for reclined occupants in the ADS environment. Finally, the OMDB test scenario resulted in more submarining cases. This might be associated with either pulse severity, or with oblique direction of loading leading to a non-symmetrical occupant interaction of the lap belt and oblique forward motion of lower extremities (Table II).

In SINCAP scenario the shoulder-belt retention and lateral head excursion were influenced by the occupant size and the seatback recline angle. Smaller occupants maintained a better contact with the belt by fitting in between the seatback bolsters and utilising additional lateral support. The effect of bolster interaction was more pronounced with the higher degree of seatback recline. On the other hand, M95 torso was wider than the seat and thus sat over the seatback bolsters, which prohibited it from utilising additional lateral support. This resulted in the largest lateral head excursion observed for the M95 model across all tested conditions. It is also possible that the seatback integrated shoulder belt, due to a d-ring height, provided a better fit for smaller occupants (Table III and Table IV).

V. REFERENCES

[1] Ostling, *et al.*, IRCOBI, 2019. [2] Liers, *et al.*, IRCOBI, 2019. [3] Saade, *et al.*, IRCOBI, 2019. [4] SAE, Taxonomy and defs. for ADS, 2014. [5] USDOT, ADS 2.0, 2017. [6] USDOT, ADS 3.0, 2017. [7] Forman, *et al.*, JSAE, 2018. [8] Ji, *et al.*, *Int J Crashworthiness*, 2017. [9] Kitagawa, *et al.*, SAE, 2017. [10] Lin, *et al.*, IRCOBI, 2017. [11] Gepner, *et al.*, ESV, 2019. [12] Kerrigan, *et al.*, JSAE, 2019. [13] Rawska, *et al.*, TIP, 2019. [14] CARHS, Safety Companion, 2019.