DESIGNING OF A DUMMY'S ABDOMEN FOR DETECTING INJURIES IN SIDE IMPACT COLLISIONS

G. Walfisch, A. Fayon, C. Tarrière, J.P. Rosey, Laboratoire de Physiologie et de Biomécanique Peugeot-Renault, La Garenne-Colombes, France.

F. Guillon, C. Got, A. Patel, Institut de Recherches Biomécaniques et Accidentologiques, Garches, France.

R.L. Stalnaker, Institut Voor Wegtransportmiddelen, TNO, Delft, the Netherlands.

The investigations were carried out with the collaboration of the Anatomy Laboratory of the U.E.R. Biomédicale des Saints-Pères (Professor J. Hureau, Director, Paris).

IN SIDE-IMPACT COLLISIONS, the abdomens of presently existing dummies do not make it possible to evaluate the risk of occurrence of abdominal injuries.

The purpose of the present investigation is to palliate this insufficiency, whose real nature is shown first of all through the analysis of accidentological data.

The human abdomen's dynamic response is then defined by means of tests with cadavers that simultaneously pinpoint the tolerance of this area of the body. This array of data enabled an initial definition of a model for an abdomen and a first attempt for a protection criterion associated with a simple instrumentation integrated into this abdomen.

DATA ACQUIRED FROM ACCIDENTOLOGY

Extent of occurrence of abdominal injuries: To realize the relative extent of occurrence of abdominal injuries as compared with those sustained by other body areas, it suffices to consult Table 1, whose results come from the accidentological survey performed by the IRO/PEUGEOT-RENAULT. This survey concerned a sample of 473 car occupants, including 309 drivers and 164 passengers, who had been in cars involved in side-impact collisions.

So as to obviate bias, a number of cases were disregarded: they involved car occupants who had been ejected and occupants located on the side facing the impact side, as well as cases of victims who had met death but had not been autopsied.

The overall evaluation of the extent of occurrence of injuries for each individual body area was obtained by adding up the cubes of the AIS (1)[x].

It emerges that the "weight" of the abdominal injuries is of the same magnitude as that of the head- and thorax injuries, for which side-impact protection criteria have already been contemplated. This magnitude is confirmed if we consider, among the previously-noted sample, those cases in which impacts involved

---

(1)[x] The numbers between brackets refer to Bibliography at the end of paper.

the passenger compartment. This collision pattern is the one that was defined by accidentology as the most critical one in side-impact collisions (2).

This is also true for the abdomen. Table 2 lists data concerning 174 car occupants. This table was obtained by considering only those accidents in which intrusion into the struck vehicle exceeded a distance of 15 cm, since there was no occurrence of abdominal injury when there was absence of intrusion in the vehicles of the sample.

Nature of abdominal injuries observed in real-world accidents: If we consider the 174 previously-selected car occupants, and if we distribute their abdominal injuries by types observed, we find that the liver and the spleen are the areas that sustain the most frequent and most serious injuries (Table 3).

It will be noted that on the average, the AIS for liver injuries are distinctly higher. This justified the decision, in the study, to privilege impacts occurring on the right side of the body.

DATA ACQUIRED FROM TESTS WITH CADAVERS

Methodology: The principle of the tests involves causing the subjects to sustain a free fall, as shown in Figure 1. The initial impact occurs on the liver, because of a local protrusion extending beyond the impacted flat surface; the role of this overlaid thickness is to simulate a local intrusion such as that caused by an armrest in a real-world accident. The upper surface of this simulated armrest is made of hardwood with rounded edges; its width is seven centimeters.

The arms on the impacted side were arranged so as not to strike the "armrest", thereby preventing them from influencing the measurement of the force sustained by the liver.

This measurement is obtained by means of a dynamometric platform equipped with Kistler piezoelectric load cells, placed below the armrest in such a way that it is sensitive only to the force applied to the latter.

The tests are filmed by high-speed cameras (1,000 fps). Analysis of the films enables evaluation of penetration and deflection in the course of time.

The cadavers are those of recently deceased individuals, unembalmed, and removed from the cold room (2° C) several hours prior to testing in order for the viscera to retrieve their natural deformability. They are perfused via femoral artery in accordance with previously described methods that enable both macroscopic and microscopic observation of whatever injuries may possibly be occurring in organs and/or blood vessels (3).

Prior to every test, a precise anthropometric measurement is recorded; the main data are listed in Table 4.

Subsequent to every test, the cadaver is autopsied and the organs are removed for the purpose of more detailed analysis of the internal injuries that may have occurred. Rib fragments are also removed for the purpose of defining the bone condition of the thoraxes of the experimental cadavers.

Multiple acceleration measurements of the skeleton are also performed.

Results: The data listed below concern eleven cadavers of an average age of 57 years (minimum 45, maximum 68).

The principal results are listed in Tables 4 and 5.

Three of the experimental subjects were eliminated from the analysis because thet had sclero-atrophic livers (fibrous, extremely hard livers; subjects 212,216 and 219). For the other subjects, the injuries found were always liver

injuries associated with rib fractures, without any apparent connection between these two kinds of injuries; in particular, in these cases, rib fractures were never an aggravating factor.

The liver injuries, except subject 213, are external or in-depth, single or multiple, with or without occurrence of deep lesions (such as stellar ruptures or central hematomes; cases 209, 215 (see fig. 2)

There were no burstings, no vascular injuries to areas above or below the liver nor any even partial tearings of liver ligaments.

Evaluation of abdominal tolerances - The tests performed triggered the occurrence of liver injuries whose gravity was evaluated in terms of AIS. In the following pages, we endeavor to link the severity of the injuries to various measured parameters. The main findings are recorded in Table 5. This table pertains to the measurements made on human subjects and in no way presumes on the conclusions obtained from tests with dummies.

These results concern human tolerances, not the protection criteria.

The cases in which the liver was not in a representative state (cirrhotic livers, e.g.) were eliminated from the analysis. The parameters successively considered were the force applied to the abdomen, the pressure exerted by the armrest, and the distance to which the armrest penetrated into the abdomen.

Force applied by the armrest - The maximum values of the force sustained by the liver were "normalized", i.e. they were corrected so as to most closely resemble those that would have been found if the subject had weighed 75 kilograms (x), the weight of the 50th percentile male dummies. In this process, we assume that Eppinger's formula (4), is a sufficient approximation despite its only relative conformity with the necessary hypotheses.

On the basis of the eight subjects usable for this analysis, the normalized force emerges as a reliable indicator of injury severity whatever the testing conditions. Figure 3 illustrates this finding ($r = 0.98$, $n = 8$), subject to the reserves that are necessary when the AIS is used.

Under the conditions of test application, a normalized force of around 450 daN can be associated with an injury severity rated class 3 in the AIS. For the abdomen, this force value constitutes a threshold above which these injuries can be considered as intolerable, conventionally.

"Average" pressure - We also endeavoured to use the pressure exerted by the simulated armrest as an injury severity indicator. For this purpose we used the following ratio:

$$\frac{\text{maximum force measured}}{\text{width of armrest x thickness of abdomen}}$$

This ratio should be closely linked to the maximum of the "average" pressure exerted. Actually, since this is due to the measurement difficulties, the abdominal thickness used was the one that had been measured prior to impact on the horizontal plane of the subject that passes through the outermost parts of the median arcs of the ninth right- and left ribs, i.e. at the level of the armrest during performance of the test.

(x) $\text{Normalized F} = \text{Measured F} \times \left(\frac{75}{\text{weight of subject}}\right)^{2/3}$

The maximum of average pressure on the armrest calculated this way can be considered as a fairly reliable indicator of injury severity ($r = 0.93$, $n = 8$), as shown in figure 4.

Under the conditions of the tests that were performed, we can use a value close to 260 kpa (2.6 daN/cm^2) as being associated with an AIS 3 for the abdomen.

Unfortunately, both pressure and force are parameters whose conversion into internal measurements for the dummies poses problems. This point will not be gone into here.

Relative penetration - The last parameter considered is relative penetration; several definitions can be contemplated depending on the test configurations (whatever the chosen definition, this is an attractive magnitude to take into consideration, because it can be directly simulated by a suitable dummy. In addition, its maximum is relatively easy to measure).

In the experiments with cadavers, it soon emerged that the measurement of penetration posed a supplementary problem involving the definition of penetration because of differences in the shapes of the trunks of the various subjects. In any case, the trunk not being cylindrical, a method was therefore defined that used analysis of the films, identical for all the tests; the principle is illustrated in figure 5.

-- What is called here penetration (OP' on figure 5) is measured on the vertical axis AA' shifted towards the head by a distance of 10 cm, in relation to the axis YY' of the armrest.

-- Point P on the periphery of the thorax passing via this axis served as a reference point for measuring the penetration.

Clearly, the value of penetration will depend on the position of the point chosen for its measurement. Point P was defined above, since at this distance from the protrusion that depresses the thorax, the differences in the subjects' shapes have less effect.

-- As long as point P remains at a higher position than the upper part of the armrest, there is a gradual cancelling out of the convexity of the trunk. This distance (PO in the figure 5) will be designated as initial deflection in the paragraphs below.

-- The zero on the penetration scale corresponds to the moment at which the preceding vertical distance becomes zero. This accounts for the existence of negative values on the curves of force/penetration + deflection (figure 8).

-- While the thorax continues to descend, penetration continues to be defined by the vertical distance from point P to the armrest, which now has a positive value on the force/penetration + deflection curves (figure 8).

Relative penetration expressed in percentage is calculated here by dividing the penetration (OP' on fig. 5) by the half-thickness of the whole thorax at the level of the median arcs of the ninth right and left ribs.

Figure 6 shows that there is no obvious relation between the abdominal AIS and relative penetration. However, this finding does not mean that there would be no relation between penetration and occurrence of injuries if the testing

procedure were different, in particular if the seated subject were struck laterally by an impactor (5).

The limitation of penetration inherent in our experimental protocol means that other parameters take on greater weight with regard to penetration.

Testing procedure is hence of considerable importance. There is reason to believe that the testing method employed here is significantly relevant, since a car occupant is often struck laterally at the level of the thorax, pelvis and abdomen by a deformed car-wall whose the most protuberant part is generally at the level of the pelvis or abdomen.

The above definition of penetration may seem arbitrary, but this method does not prevent a more complete use of the data in so far as there is examination of the possible relations between injuries and the various magnitudes that can be associated with the common idea of penetration.

In this connection, if we consider the combined initial deflection + penetration (i.e. the distance PP' in figure 5) expressed in percentage of the half-thickness of the whole thorax at the levels of the ninth right and left ribs, we see no obvious relation between this parameter and the severity of injuries (figure 7).

Although this magnitude, which we had planned to use for the purpose of defining abdominal tolerance, is not in direct relationship with injury severity, it can however be noted that under a value of about 28 % of the impacted abdominal half-thickness, there is no risk of injury occurrence.

QUITE APART FROM THE MATTER OF HUMAN TOLERANCES, it is necessary to characterize the dynamic behavior of the human subjects' abdomens, in order to have a satisfactory set of specifications for designing the dummy's abdomen. For this purpose, in the tests described above, we endeavoured to define the force characteristics in terms of the deflection + penetration (PO + OP' on fig. 5) of the human abdomen.

We believe that these are the most important characteristics to be simulated in order to achieve proper duplication of the abdomen's behavior vis-à-vis the surfaces that it is likely to impact.

The curves found are shown in figure 8, where, on the ordinate, there is shown the normalized force and, on the abscissa, are shown the deflection and relative penetration of the impacted half-abdomen.

These curves were assembled together in Figure 9 in order to define a corridor that would be usable for determining the dynamic response of the abdomen of a suitable dummy.

We can consider two families of curves corresponding, respectively, to fall-heights of one meter and two meters. It should be noted that the average rigidity associated with each of the two families is appreciably in the relation of the impact velocities. This remark confirmed the influence of velocity on the apparent dynamic rigidity of this abdominal area.

[If we consider the tests performed at a dropping height of one meter, we find, in figure 9, the influence of armrest penetration speed on the initial rigidity of the abdomen. In fact, the tests involving an armrest that actually reduces penetration speed are expressed by a curve (F, penetration + deflection) having a lower initial slope (subjects 210 and 212).]

On the basis of the findings from tests performed with human subjects, it is therefore impossible to define a corridor for a dummy's abdomen independently from the testing conditions and, in particular, from the penetration velocity. An initial abdomen model is illustrated farther on in this report. This model was designed on the basis of the force/penetration + deflection characteristics

yielded by dropping from a two-meter height. In fact, the corresponding penetra tion velocity is closer to what would be experienced by a laterally-struck car occupant in a representative severe collision than is the velocity achieved by dropping from one-meter height.
The corridor thus obtained is illustrated in Figure 10, which additionally shows the maximum values of the previously defined parameters, on the basis of which a protection criterion can be determined.

DESIGN PHILOSOPHY FOR THE LATERAL IMPACT ABDOMEN OF THE DUMMY.
The design philosophy for the abdomen is based on the following suppositions :

--Injury criteria are already being developed for the thorax and pelvis. Standards based on these criteria should reduce the risk of abdominal injuries. Therefore, the abdomen should be designed only to detect first-order injuries from penetration (in the common sense).

--Although the human abdominal region is not symmetrical, the dummy abdomen should be thus resulting in the same injury criterion for impacts to the right and left side.

--The abdomen should be designed for repeated use, that is no permanent deformation.

--The instrumentation for injury prediction should be as simple as possible.

--Repeatability and reproducibility should have a high priority.

--Taking into consideration the above suppositions, the injury criterion was built into the abdomen and interpreted by a go/no go transducer system. The impactresponse and tolerance level used in the design of both sides of the abdomen were matched to the right side of the human abdomen, because the accident data indicated the liver is the most commonly injuried abdominal organ.

DESIGN OF THE LATERAL IMPACT ABDOMEN OF THE DUMMY.
The abdomen, by precise definition, is defined by that region below the diaphragm and extending into the pelvic girdle. In the case of lateral impact the upper most part of the abdomen is partially protected by the lower ribs, while the lower most part of the abdomen is protected by the pelvic girdle. Because of this, the area of interest for later abdominal impact prediction was defined as the region from the sixth rib to the top of the ilium. This region on the Part 572 dummy most closely represents the area from the bottom of the last rib to the top of the dummy ilium.
The design base for the lateral impact abdomen is the Part 572 abdominal insert along with the APR thorax(6-7) and Part 572 pelvis and spine. The portion of the Part 572 abdomen which fits into the pelvis girdle was left unchanged.
Two conditions for injury were obtained; the first is a force greater than 450 daN (or a pressure greater than 2.6 daN/cm2) and the second is a "penetration" of more than 28% of the half abdomen (3.9 cm for Part 572).

If force and/or penetration are to be continously measured accurately for impacts in various directions, then multiple force and penetration transducers will be need. This approach can lead to a large and complicated instrumentation system.

Since only the tolerance limit value is required to predict injury, a continous force and penetration preading is not needed, so if in principle, a switch could be placed in the abdomen at the penetration limit and if that

switch were designed to close at the force limit, or pressure limit, then both injury predictors at any point in the abdomen could be obtained by whether the switch closes or not. That is, the switch will close at the pressure limit indicating that tolerance has be reached, ether by high force with low penetration or by high force obtained by bottoming out the impact at the penetration limit. Using this principle, it would be possible to put as many switches as desired in the abdomen and only reading out if the switch was closed or not. Each switch could be coded with a unique voltage, so any one or more switch closures could be distinguished. This is the concept use in designing the abdominal injury prediction system (see fig. 11).

The shape of the lateral impact abdomen from the pelvic girdle to the last rib, approximatly eleven centimeters, is that of the outer surface of the Part 572 dummy between the two above mentioned body parts. The dummy skin was removed in this area to make room for the new abdomen. The lateral impact abdomen was constructed from urethane foam.

The dynamic response of the new abdomen was matched to the centre of the cadaver test data corridor shown in fig. 10. This response was for the same conditions as the cadaver tests. Because no data was available for any direction other than pure lateral and because symmetry was desired, the dynamic response was made the same in all directions but for ± 30 degrees off the centre of the dummy back (see fig. 11).

DESIGN OF THE INJURY PREDICTION SYSTEM.

The abdominal injury prediction system consists of the following components :

-- A ridge, smooth, cylindrical insert is placed in the abdomen, extending from the last rib to the pelvis, so as to introduce a physical stop at the penetration limit of 3.9 cm.

-- Six tape switches are placed on the cylindrical surface extending longitudinally at 15° intervals around the lateral surface of the penetration stop. A flat, steel spring is then placed over each switch, so that the tape switch will close when a pressure of 260 KPa (2.6 daN/cm2) is applied anywhere on the surface of the spring (see fig. 11). (for the pressure, see fig. 4)

-- Because of the low informational content of the six tape switch signals, that is simply a go/no go output, it was felt that it would be very inefficient to record this data on six individual instrumentation channels. Therefore, the six output signals of the switches were converted into one signal. This single data channel must at all times be unique, which means that the original six switches must always be distinguishable from each other. This was accomplished by converting each of the six switches output signals in to a binary voltage ranging from 41 mV to 660 mV. With this arrangement the closure of any switch can be detected at any time during a test.

CONCLUSIONS

Data on human tolerance and on the dynamic response of the human abdomen were yielded by tests performed with cadavers. They enabled the realization of a simulation of a human abdomen adaptable to the collision dummies PART 572 and A.P.R. (6) (7), with which it will be possible to define and validate protection criteria.

A dummy equipped with this simulated abdomen will enable detection of the

absence of severe injury in this body area during the occurence of a lateral collision.

ACKNOWLEDGMENTS

-- For his aid to the accidentological part, the authors wish to express their thanks to Mr. G. Faverjon of the Peugeot-Renault Association Laboratory of Physiology and Biomechanics.

-- These investigations were carried out under the heading of a contract between the Peugeot-Renault Economic Interest Group, TNO (Delft) and the European Economic Community. The authors express their thanks for permission to publish the research results.

-- Findings and opinions reported here are those of the authors.

REFERENCES

(1) Joint Commitee on Injury Scaling of Society of Automobile Engeneers. American Medical Association and the American Association for Automotive Medecine "The Abreviate Injury Scale" (1975 revision).
Proceedings of the 19th Conference the American Association of Automobile (A.A.A.M. November 20/22 - 1975)

(2) Occupant Protection in Lateral Impacts.
F. Hartemann; C. Thomas; J.Y. Foret-Bruno; C. Henry; A. Fayon; C. Tarrière
Proceedings of 20th Stapp Car-Crash Conference.
Dearborn Michigan - October 18/20 - 1976

(3) Results of Experimental Head Impacts on Cadavers - The Various Data obtained and their relations to some measured physical Parameters.
C. GOT; A. Patel ; A. Fayon; C. Tarrière; G. Walfisch.
Proceedings of the 22 nd Stapp Car Crash Conference
Ann Arbor - Michigan - October 24/26 - 1978.

(4) Prediction of Thoracic Injury using measurable Experimental Parameters, DOT, NMTSA Washington. R.H. Eppinger.

(5) Human Torso Response to Blunt Trauma.
RL. Stalnaker; J.M. Mac Elhaney; V.L. Roberts; M.L. Trollope.
Proceedings of the Symposium on Human Impact Response held at the General Motors Research Laboratories.
Warren - Michigan - October 2/3/ - 1972.

(6) Presentation of a Frontal Impact and Side Impact Dummy, defined from human data and realized from a "PART 572" dummy.
A. Fayon; Y.C. Leung; R.L. Stalnaker; G. Walfisch; M. Balthazard; C. Tarrière.
Proceedings of the 7th E.S.V. Conference- Paris - France- June 1979.

(7) Modification of PART 572 Dummy for Lateral Impact according to Biomechanical Data.
R.L. Stalnaker; C. Tarrière; A. Fayon; G. Walfisch; M. Balthazard; J. Masset; C. Got; A. Patel.
Proceedings of the 23rd Stapp Car Crash Conference.
San Diego - California - October 17/19 - 1979.

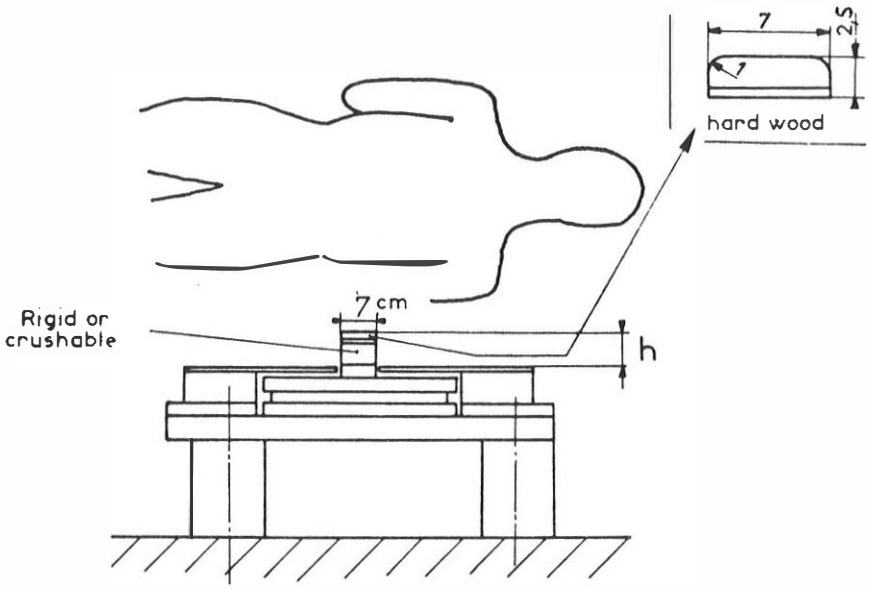

FIG.1 CONFIGURATION OF THE ABDOMINAL LATERAL DROP TESTS.-

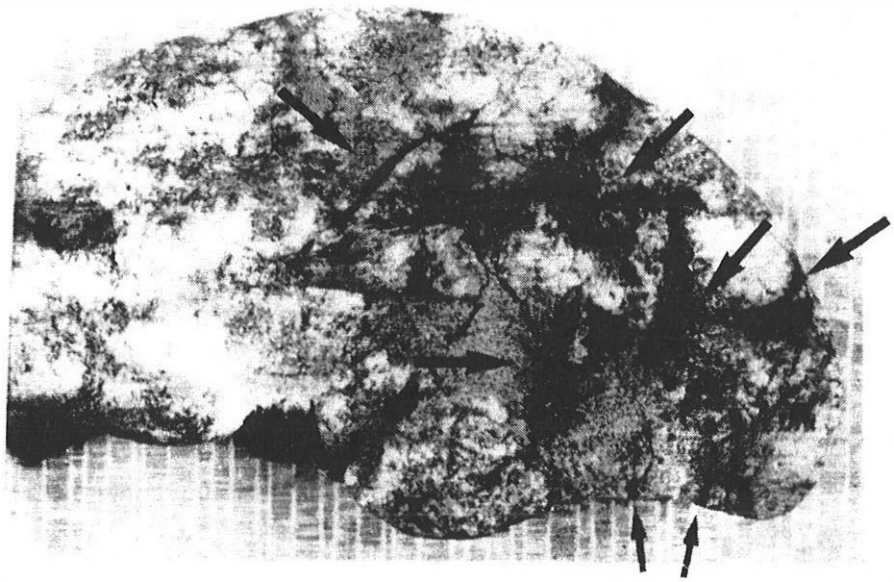

FIG. 2 LIVER INJURIES - CASE # 215.-

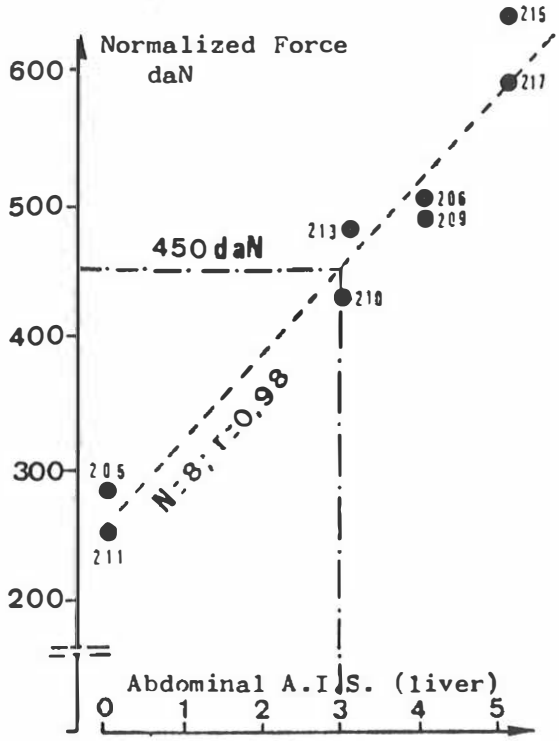

Fig 3 - Max normalized Force versus abdominal A.I.S.

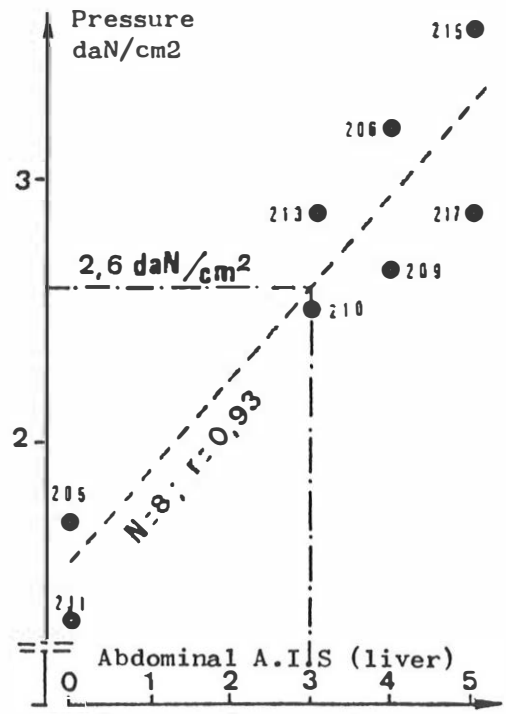

Fig 4 - Max "average" Pressure versus abdominal A.I.S.

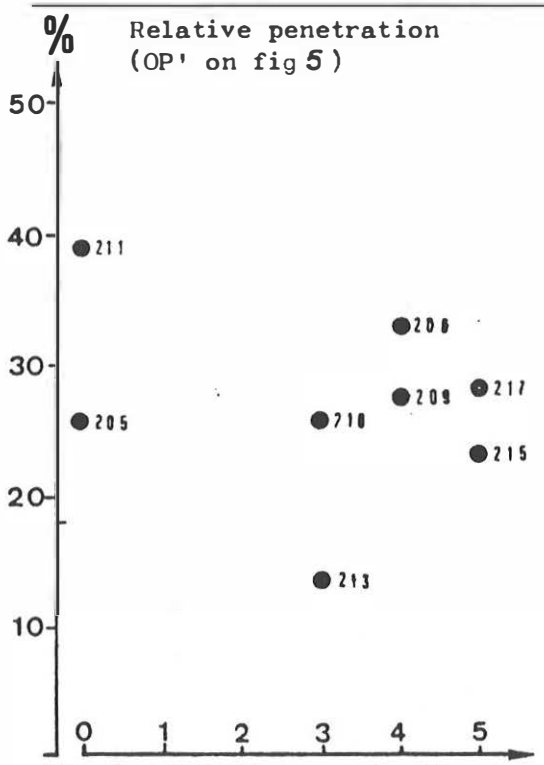

Fig 6 - Relative penetration versus abdominal A.I.S.

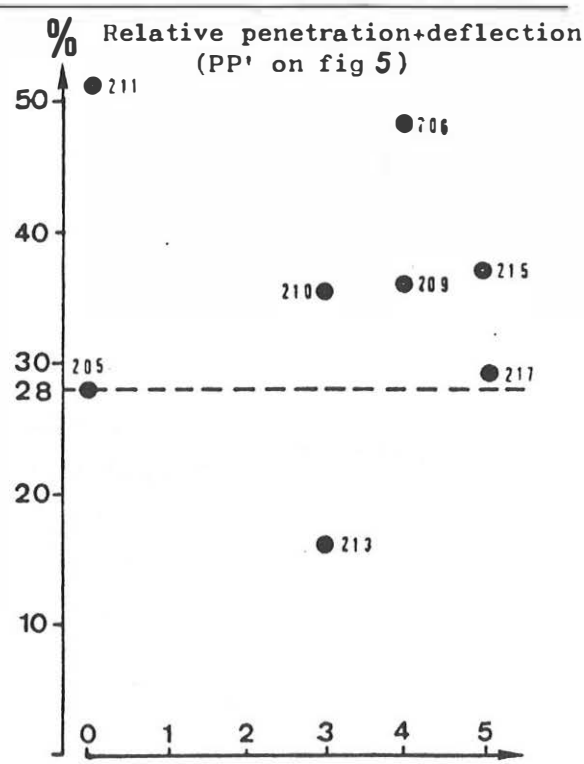

Fig 7 - Relative penetration+deflection of 1/2 impacted abdomen versus abdominal A.I.S.

FIG. 5_ Definition of the deflection and the penetration

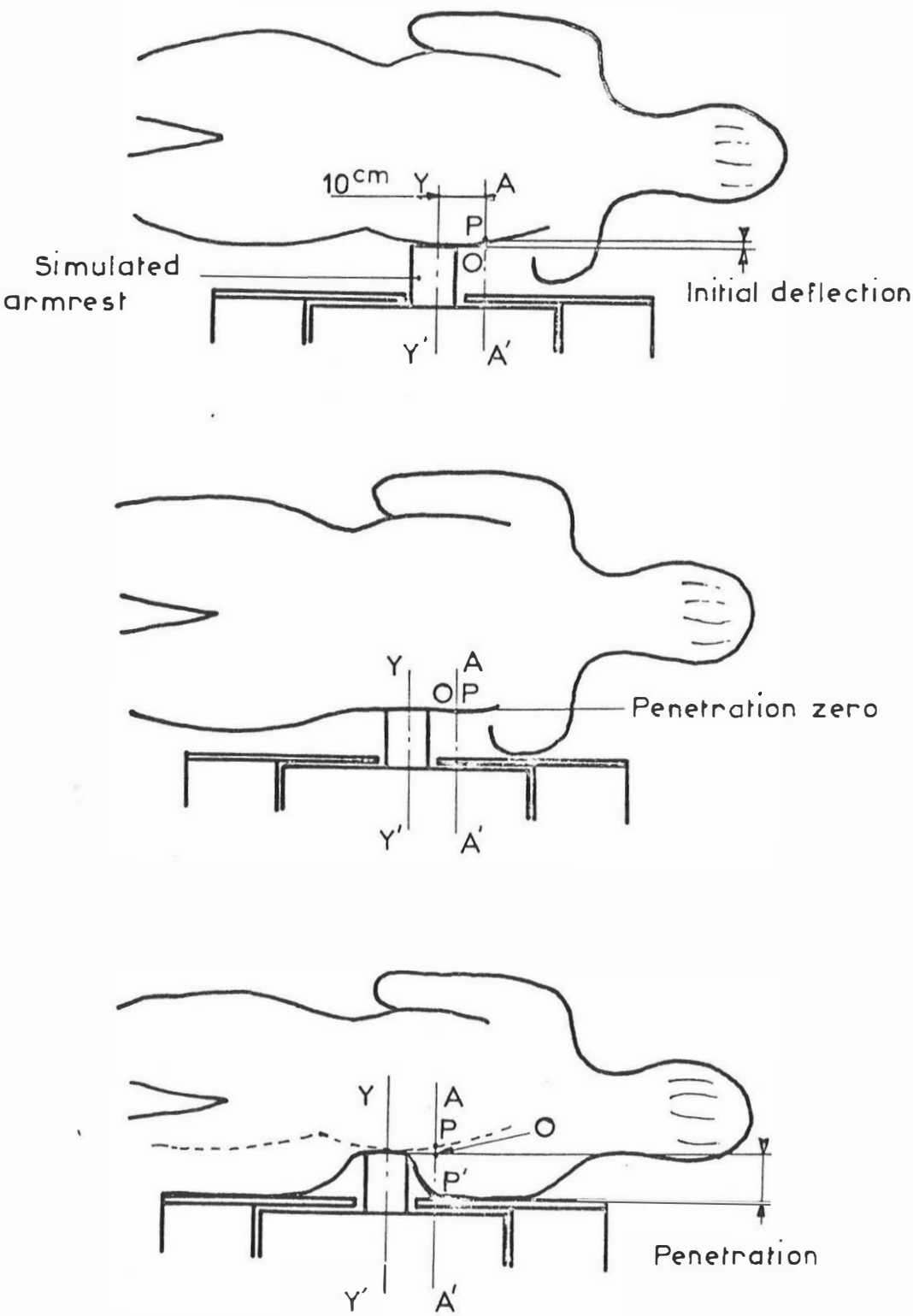

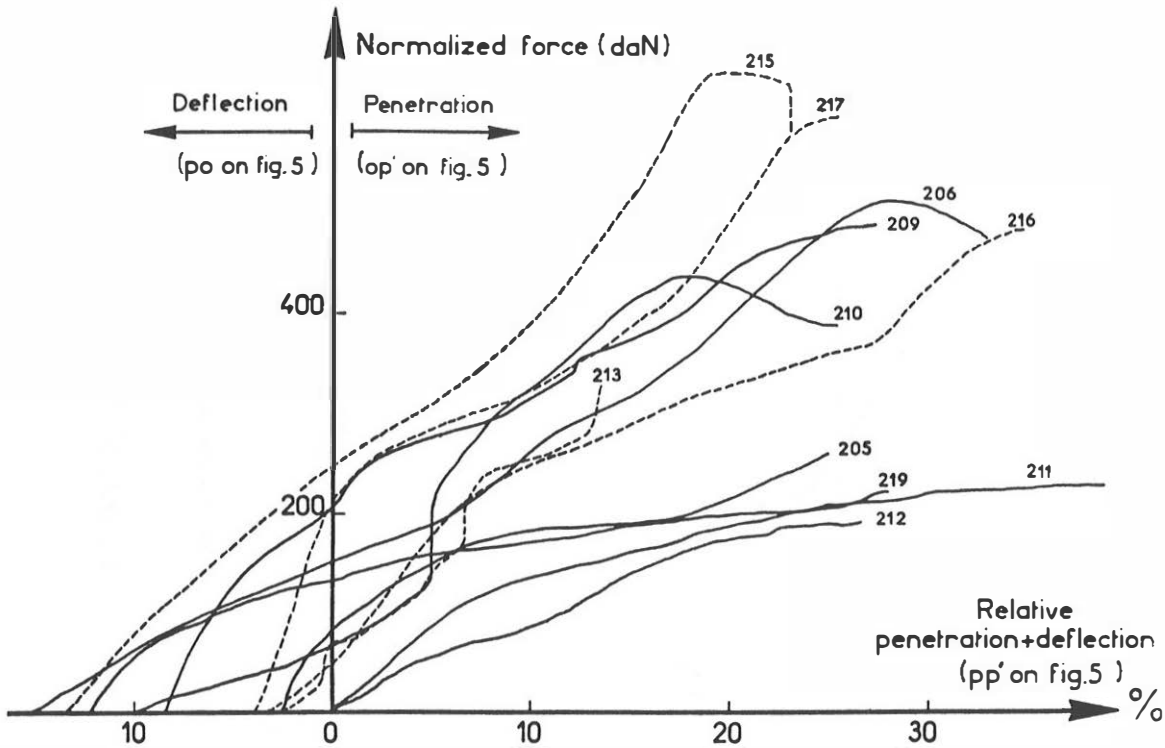

FIG.8 Normalized force versus relative penetration+deflection of the half impacted abdomen

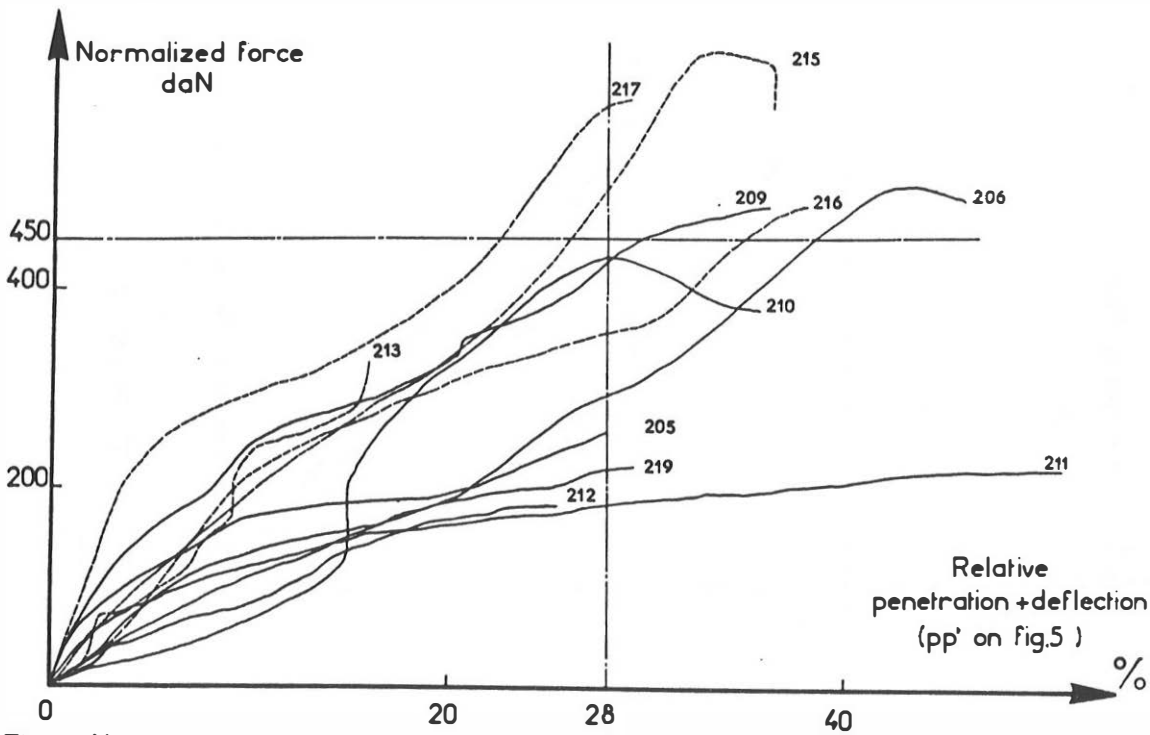

FIG. 9 Normalized force versus relative penetration+deflection of the half impacted abdomen

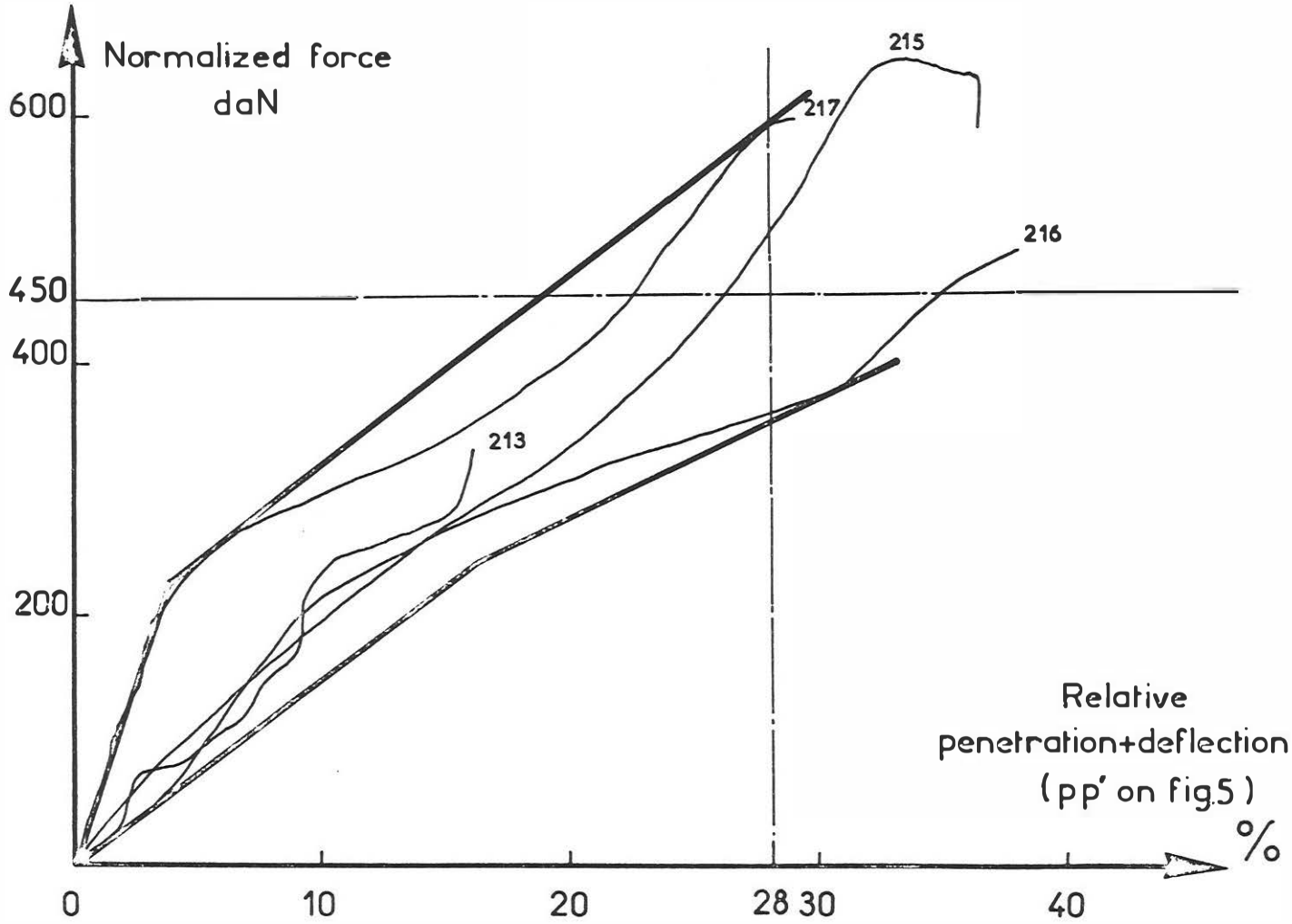

FIG.10 Corridor of force versus relative penetration+deflection of the half impacted abdomen

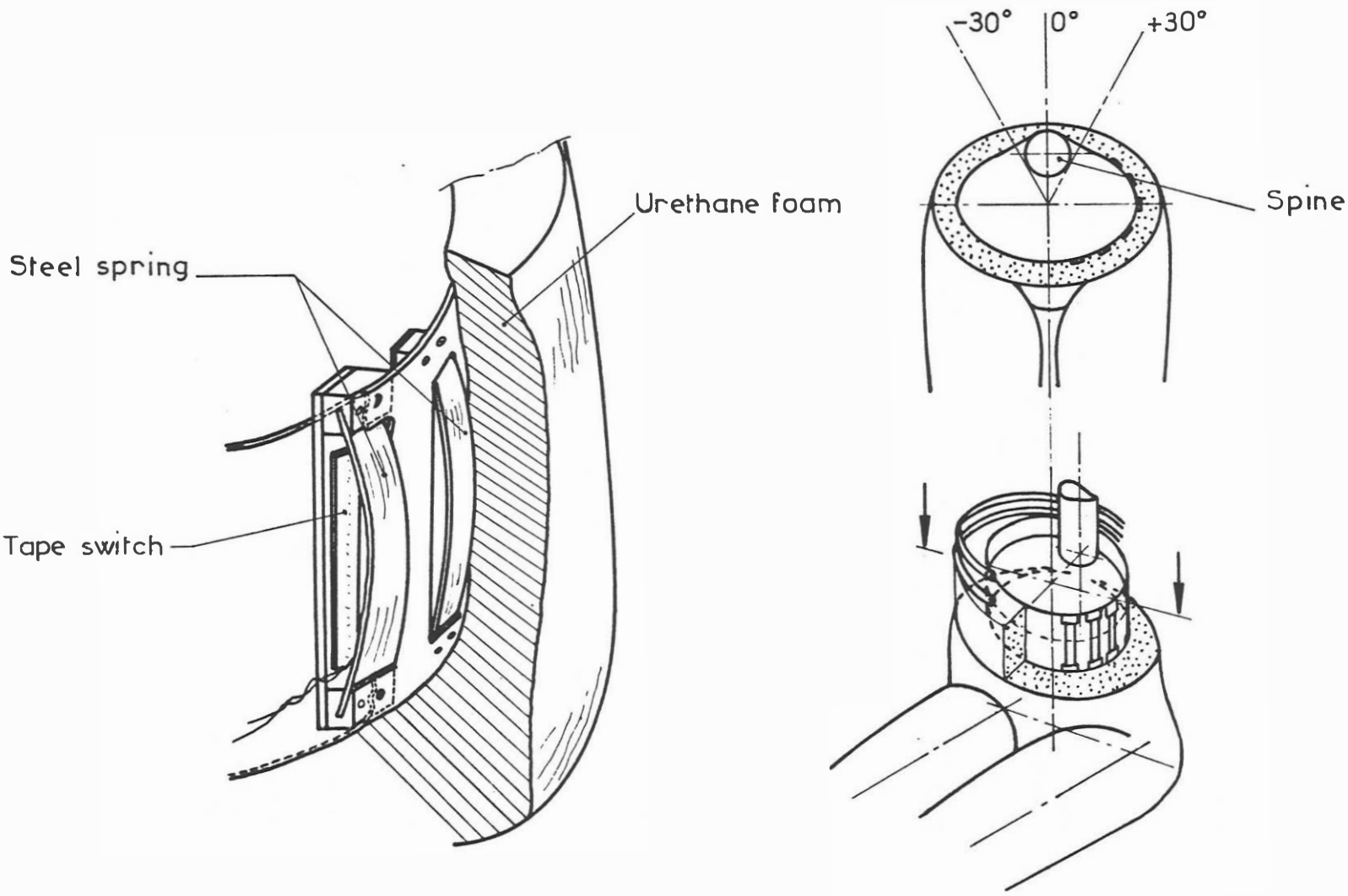

FIG. 11 Abdominal injury prediction system

TABLE 1 - ACCIDENTOLOGICAL DATA - SEVERITY OF INJURIES FOR NEARSIDE OCCUPANTS - ALL LATERAL COLLISIONS - N = 473 OCCUPANTS

Body segment	A.I.S. 0	1	2	3	4	5	$\frac{\sum AIS^3}{N}$
Head	185	181	83	8	4	12	5,96
Neck	441	26	4	3	-	-	0,43
Thorax	319	78	17	40	13	6	6,08
Upper members	359	93	4	17	--	-	1,23
Lumbar spine	440	26	-	5	2	-	0,61
Pelvis	410	25	16	22	-	-	1,58
Abdomen	410	31	-	2	23	7	5,14
Lower members	348	87	14	20	4	-	4,10

TABLE 2 - ACCIDENTOLOGICAL DATA - SEVERITY OF INJURIES IN LATERAL COLLISIONS INVOLVING PASSENGER COMPARTMENT - NEARSIDE OCCUPANTS - N = 174 OCCUPANTS

Body Segment	A.I.S. 0	1	2	3	4	5	$\frac{\sum AIS^3}{N}$
Head	51	65	40	4	3	11	11,84
Neck	164	8	-	1	1	--	0,57
Thorax	92	32	7	28	1	4	11,77
Upper members	118	42	2	12	-	-	2,20
Lumbar spine	157	13	-	13	1	-	0,91
Pelvis	129	11	15	19	-	-	3,70
Abdomen	136	10	-	2	20	6	12,03
Lower members	114	35	6	17	2	-	3,85

TABLE 3 - FREQUENCY AND SEVERITY OF ABDOMINAL INJURIES IN LATERAL COLLISIONS INVOLVING THE PASSENGER COMPARTMENT - INTRUSION $\geqslant$ 15 CM - N = 174 NEARSIDE OCCUPANTS.-

Abdominal lesions	A.I.S. 0-1	2	3	4	5
Liver	164	-	-	4	6
Spleen	156	-	-	18	-
Kidney	168	-	4	-	2
Pancreas	172	-	-	2	-
Mesentery	170	-	3	1	-
Peritoneum	167	-	5	2	-
Bladder	172	-	-	2	-
Colon	172	-	1	1	-
Cecum	172	-	1	1	-
Small bowel	173	-	1	-	-

TABLE 4 - CADAVER LATERAL DROP TESTS ON THE ABDOMEN - ANTHROPOMETRIC DATA AND INJURIES

Test N°	ANTHROPOMETRIC DATA: Age Sex	Weight Kg	Abdomen at the 9th rib level: thickness cm	width cm	circumference cm	INJURIES: N.of rib fractures	Abdominal injuries (liver)	Abd AIS	Observat.
205	62F	32	13.5	24.2	67.1	3	No injury	0	
206	66M	82	24	31	98.7	9	Wound on inf. face of right lobe	4	
209	54M	51	20	29	88	4	Wound on sup. face of right lobe + many internal injuries	4	
210	61M	71	26.3	29	93.5	4	Wound on anterior border of right lobe	3	
211	46M	43	18.5	26	79.5	0	No injury	0	
212	45F	45	21	22	75.5	5		–	atrophic cirrhosis
219	68F	52	18.5	29	87	12		–	
213	67M	77	24.5	34	112	8	Contusion on inf. face of right lobe	3	
215	52M	53	20.5	28	88.5	7	Little wound due to a rib + wound on sup. face of right lobe + wound on inf. face of right lobe + fissure on inf. border + many internal injuries	5	
216	56M	49	20.7	29.5	89.2	11		—	atrophic cirrhosis
217	55M	58	25	32.5	104	11	Deep wound on sup. face of right and left lobes + fissure on inf. face of right lobe	5	

TABLE 5 - CADAVER DROP TESTS ON THE ABDOMEN - TEST CONDITIONS AND MEASUREMENT RESULTS

Test No.	Height of fall (m)	Protrusion of simulated armrest (x) (mm)	Supporting material for ar rest(x)	APPLIED FORCE (daN): F. max Measured	F. Max Normalized	F. normalized at P'time (1)	PENETRATION (1): OP' mm	OP' (xx) relative(%)	PENETRATION + DEFLECTION (2): PP' mm	PP' (xx) relative(%)	ABD.^{nl} AIS
205	1	31	rigid	160	282	270	31	25,6	34	28	0
206	1	51	rigid	535	504	470	51	33	74	48	4
209	1	51	polystyrene	380	491	490	40	27,6	52	36	4
210	1	51	polystyrene	415	430	385	37	25,5	51	35,5	3
211	1	53	phenespan	170	246	225	51	39	66	51	0
212	1	55	polystyrene	150	211	190	29	26,6	29	26,6	-
219	1	41	rigid	195	249	225	41	28,3	26	18,3	-
213	2	55	polystyrene	490	481	330	23	13,5	27	16	3
215	2	31	rigid	510	643	580	31	22,9	48	34	5
216	2	51	rigid	420	558	485	51	34,6	56	38	-
217	2	41	rigid	500	593	600	41	25,6	47	29	5

(x) see figure 1

(1) OP' = penetration defined on figure 5 - (2) PP' = penetration + deflection defined on figure 5

(xx) relative to the half-abdomen at the 9th rib level