BIOFIDELITY AND REPEATABILITY EVALUATION OF THE THOR DUMMY THORAX, ABDOMEN AND FEMUR, THROUGH A SET OF TESTS

L. Martínez INSIA
G. Ferichola INSIA
L.J.Guerra INSIA
M.Van Ratingen TNO
D. Hynd TRL

ABSTRACT

Several pendulum tests were conducted in order to evaluate the biofidelity of the thorax, abdomen and femur of the new THOR-alpha frontal impact dummy under blunt impact. Test configurations were selected to compare THOR-alpha dummy response with the best up-to-date information available concerning thorax, abdomen and femur human response in pendulum tests. This paper presents the results of several sets of tests performed to evaluate dummy response against EEVC WG12 proposed biofidelity requirements for a frontal impact dummy, the NHTSA certifications and also corridors obtained in PMHS tests. Results indicate that dummy response is quite similar to PMHS response, although some parts could be redesigned to improve the biomechanical response of the THOR dummy. In addition to these pendulum tests, several tests were performed to evaluate the response under belt compression of the lower abdomen.

KEYWORDS

THOR, Thorax, Abdomen, Femur, Biofidelity, Repeatability

NOWADAYS IN EUROPE the dummy used to assess the protection of occupants in frontal impacts is the HYBRID-III crash test dummy. This dummy is based on biomechanical studies carried out in the seventies and on biomechanical data from these days. Although the dummy has been updated since then, it seems that its performance are no longer good enough to assess the protection offered by the vehicle and do not reflect the current biomechanical knowledge.

THOR-alpha is a relatively new frontal impact dummy developed in the last years in US (Rangarajan 1998, Haffner 2001). This dummy has a new design and incorporates several new components and sensors compared with current frontal crash test dummies, like HYBRID-III, in order to improve the dummy biofidelity response and the injury assessment capabilities. For more information about the structure and components of the dummy see THOR user's manual [5].

During the last years, two European projects, ADRIA "Advanced Crash Dummy Research for Injury Assessment in Frontal Test Conditions" (2000) and FID "Improved Frontal Impact Protection Through a World Frontal Impact Dummy", have been developed with the purpose of the evaluation of the biofidelity, repeatability and sensitivity of the new THOR-alpha frontal impact dummy.

In the FID project an in-depth literature review has been undertaken on behalf of EEVC. As a result of this review, a set of frontal impact biofidelity requirements, consisting of references, description of test conditions and corridors has been collected (FID partners 2003). This paper includes the results obtained from a set of almost fifty tests carried out as part of the FID project to evaluate the biofidelity and repeatability of the THOR dummy thorax, abdomen and femur against corridor defined by the FID consortium and by certification requirements [6].

METHODOLOGY

Several tests were carried out to evaluate biofidelity of the thorax, upper abdomen, lower abdomen and femur of a THOR-alpha frontal impact dummy. In Table 1 a detailed description of test configurations, objectives and main signals registered during the performance of these tests is included.

Test	Objective	Test Feature	Outputs
Thorax test Kroell et al. (1971)	14 tests to evaluate Thorax biofidelity and repeatability in blunt impact.	▪ Impactor Ø152 mm flat rigid 23.4 kg ▪ Impact velocities 4.3 m/s & 6.7 m/s ▪ Full dummy without back support	▪ Pendulum velocity ▪ Pendulum acceleration ▪ Thorax deflection
Upper abdomen test Nusholtz et al. (1994)	8 tests to evaluate upper abdomen biofidelity and repeatability in blunt impact.	▪ Impactor 18 kg with steering wheel shape mounted at an angle of 45º to the horizontal ▪ Impact velocity 8 m/s ▪ Full dummy without back support	▪ Pendulum velocity ▪ Pendulum acceleration ▪ Upper abdomen string potentiometer ▪ Dummy displacement.
Lower abdomen test Cavanaugh et al. (1986)	4 tests to evaluate lower abdomen biofidelity and repeatability in blunt impact. 6 tests to evaluate sensitivity of the lower abdomen instrumentation in blunt impact.	▪ Impactor 32 kg 25 mm diameter rigid bar of length 30 cm ▪ Impact velocity 6.1 m/s ▪ Full dummy without back support	▪ Pendulum velocity ▪ Pendulum acceleration ▪ Lower abdomen penetration units. ▪ Dummy displacement.
Lower abdomen test Rouhana et al. (1989)	6 tests to evaluate lower abdomen biofidelity under belt loading	▪ 5cm wide seat belt compressing at velocities ranging from 1.09 to 3.21 m/s. ▪ Dummy without legs	▪ Belt force compression ▪ Belt displacement ▪ Lower abdomen penetration
Knee test Haut and Atkinson (1995)	12 tests to evaluate knee biofidelity and repeatability in blunt impact.	▪ Impactor 4.5 kg ▪ Impact energy from 3 up to 90 J ▪ Isolate lower leg+knee	▪ Pendulum velocity ▪ Pendulum acceleration ▪ Femur load cell

Table 1. Test matrix to evaluate THOR biofidelity and repeatability

These tests are the ones described in the certification procedures developed to verify the proper response characteristics of the different dummy parts specified by NHTSA. Each type of test configuration reproduces the set up of the tests performed with Post Mortem Human Subjects (PMHS).

THORAX TEST: KROELL

- THOR thorax test configuration (see Figure 1) is the well known one derived from Kroell and it is in agreement with the NHTSA recommendations. The main characteristics of this test configuration are presented in Table 1, for a detailed description of the test see Kroell et. al. (1971).

A total of fourteen tests were performed, seven at 4.3 m/s and seven at 6.7 m/s.

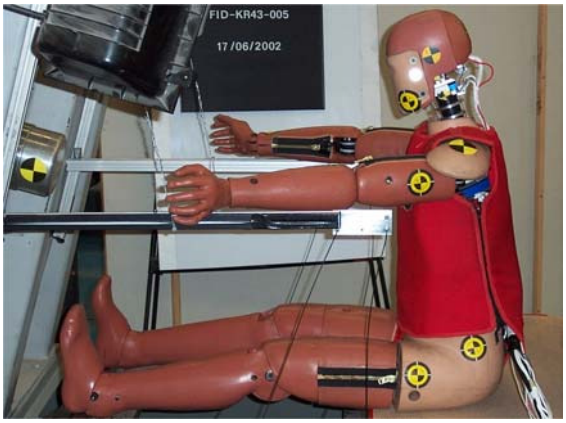

Figure 1 Kroell thorax tests set up.

Thorax dummy structure

In these tests the response of the dummy thorax is evaluated. The structure of the thorax is described below for a better understading of the parts of the dummy that dictate the response of the dummy thorax in these tests.

The structure of the dummy that is evaluated in these tests is the rib cage. The rib cage is compound of seven ribs attached to the thoracic spine of the dummy on the back side and to the protective bib on the front side (see Figure 2 left side). On the inner side of the protective bib the mid sternum assembly is attached (see Figure 2 right side).

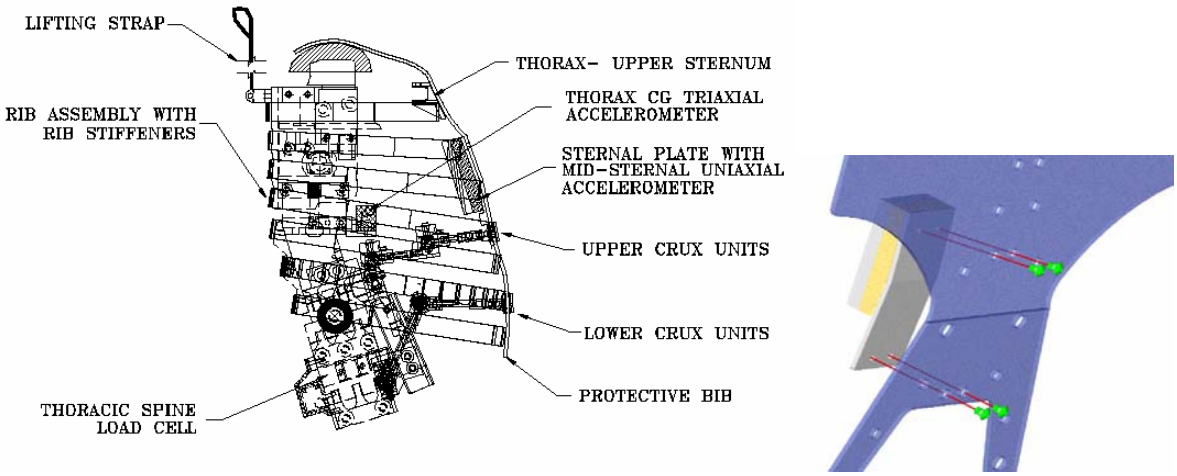

Figure 2 Detail of the rib cage structure and the mid-sternum assembly attached to the inner side of the bib

UPPER ABDOMEN TEST: NUSHOLTZ

For Nusholtz upper abdomen tests, INSIA has worked with test configuration recommended by the EEVC WG12 with the steering wheel tilted 45º, instead of the 30º degrees specified by the NHTSA. The 45º degrees configuration is in agreement with the original Nusholtz test set up (Nusholtz et al.1994). In this study a force-penetration response corridor for the upper abdomen is provided. In the present study, the 8m/s impact test corridor is taken as a reference to evaluate the upper abdomen THOR dummy response.

Eight tests were performed to check the biofidelity of THOR upper abdomen and its behaviour.

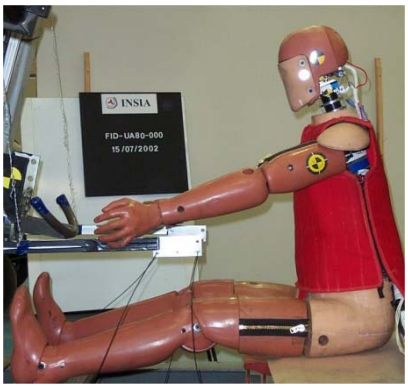

Figure 3 Nusholtz upper abdomen tests set up

Upper abdomen dummy structure

The upper abdomen is the region on the dummy that represents the lower thoracic cavity. Physically, this component (Figure 4) fills the volume that exists between the lowest three ribs, above the lower abdomen and in front of the spine. The component is primarily constructed of deformable

materials to produce a compression response similar to human cadaver test data (see hatched zone in Figure 4).

The upper abdomen is attached rigidly to the dummy spine through the spinal mounting assembly.

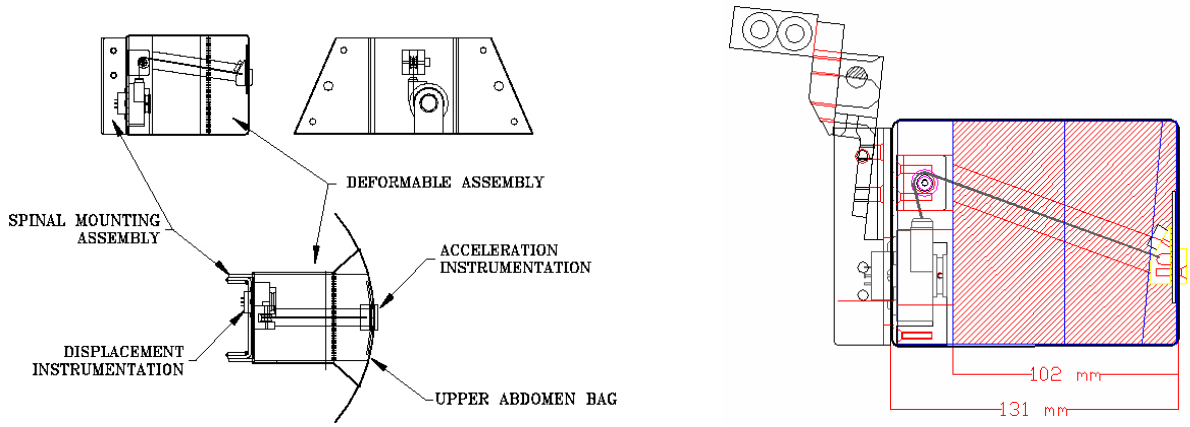

Figure 4 Upper abdomen assembly.

LOWER ABDOMEN TEST: CAVANAUGH

Test configuration for performing the Cavanaugh lower abdomen tests (see Figure 5) was the same as recommended by NHTSA and EEVC. In the study performed by Cavanaugh et al. 1986 a set of force-deflection corridors were generated at two impact velocities 6.1 m/s and 10.4 m/s. The present study evaluates the THOR lower abdomen biofidelity response using the 6.1 m/s test configuration.
A total of four tests were performed to assess biofidelity of the lower abdomen. Another six tests were carried out to evaluate the sensitivity of the lower abdomen instrumentation to the location of the impact point. In order to achieve this the location of the impact point was moved up and down vertically in steps of 10 mm.

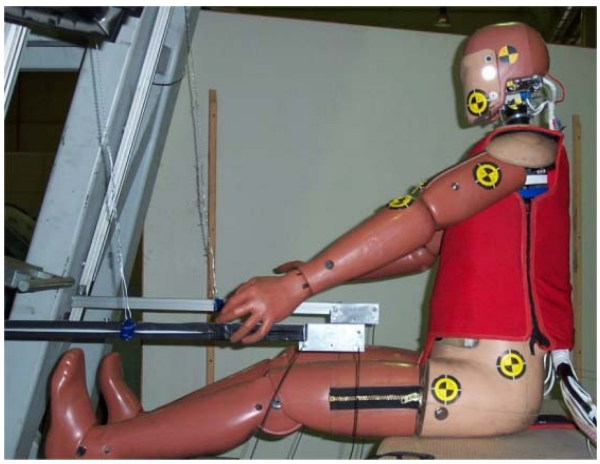

Figure 5 Lower abdomen test set up

Lower abdomen dummy structure

The lower abdomen is defined as the region of the human body between the lower thoracic rib cage and the pelvic girdle. The component is primarily constructed of deformable materials to produce a compression response similar to human cadaver test data. Instrumentation has been incorporated into the lower abdomen assembly to measure the three-dimensional displacement of the region at two distinct points. A drawing of the complete lower abdomen assembly is provided in Figure 6.

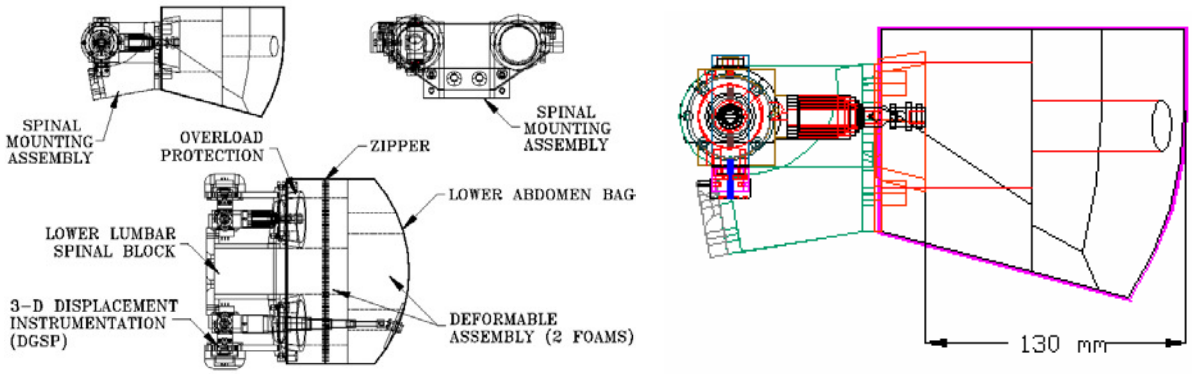

Figure 6 Lower abdomen dummy assembly

LOWER ABDOMEN TEST UNDER BELT COMPRESSION: ROUHANA

The configuration of the Rouhana test used in this study differs from the original set up performed by Miller (1989) with anaesthetized and dead swine. The main differences lies in belt length and its rigid support. In the Miller tests, the belt was mounted to the ends of a spherical aluminium yoke. The yoke was connected to an actuator with a programmed loading and unloading stroke (see Figure 7). However, in this study the dummy was supine on a flat rigid table and it was compressed with a belt fitted around its lower abdomen, approximately at the fourth lumbar vertebra. The belt was fixed to the ends of a rigid beam, placed below the table. From the beam centre a cable was connected to a controlled actuator that pulled down to compress the abdomen (see Figure 8).

Six tests at different impact speed were performed at velocities ranging 1.09-3.21 m/s.

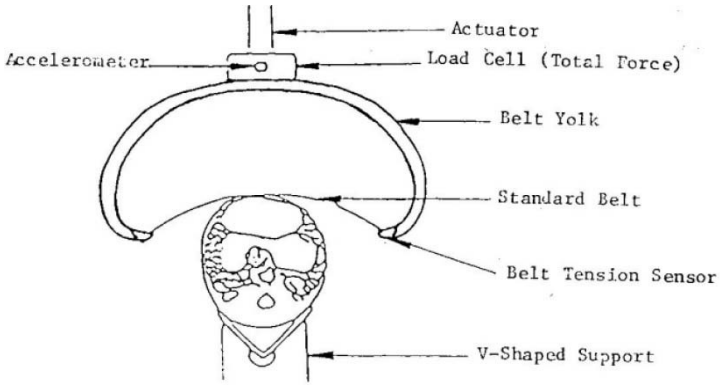

Figure 7 Miller test set up.

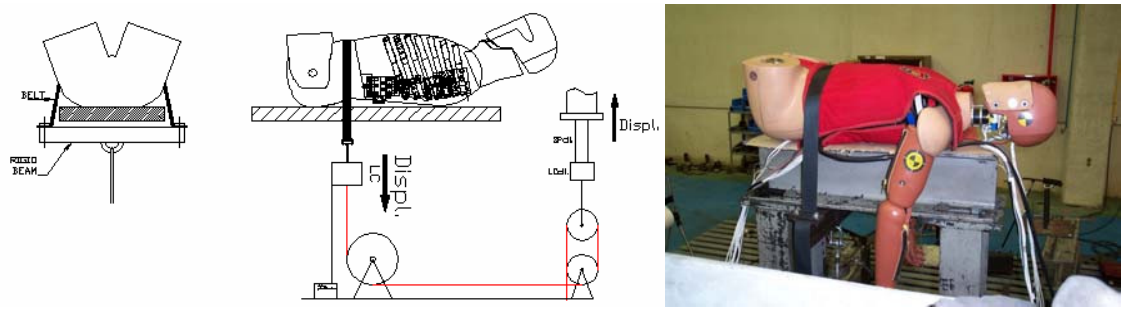

Figure 8 Set up for the test of abdomen compression under belt loading.

KNEE FEMUR TEST: HAUT AND ATKINSON

The THOR dummy femur incorporates an axial-compliant bushing to reduce the stiffness and to improve the biomechanical response of THOR femur compared to HYBRID III femur response. The

configuration of tests to evaluate the femur response was the same used by Haut et al (1995). The main characteristics are:

- End of the femur is isolated and attached to a metal steel sleeve mounted on a rigid structure.
- Impact mass is 4.5 kg.

Six tests were carried out in each femur. The impact velocity was sequentially increased from 1.11 to 6.11 m/s.

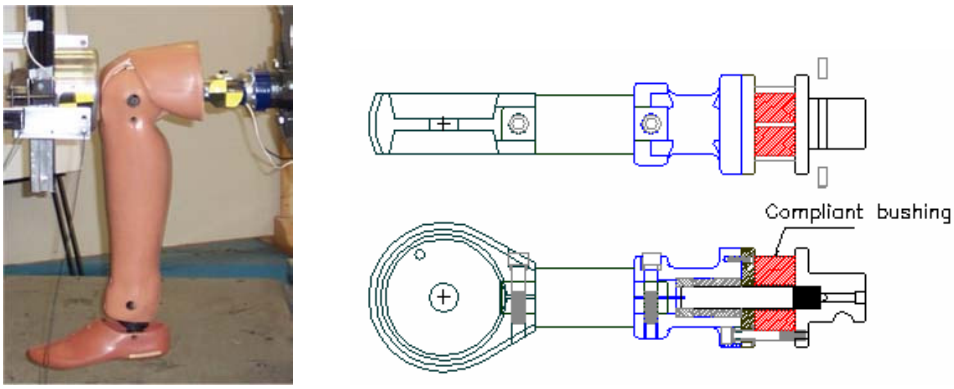

Figure 9 Knee impact tests set up and detail of the femur assembly

Femur dummy structure

The THOR femur has been designed with an axial-compliant bushing that has been tuned to create a biofidelic deflection along the axis of the femur during an impact (Figure 10). The axial compression of the femur has been designed to simulate the compressive response of human cadaver femurs. The compliant section is constrained by a shaft that slides linearly within the bushing. Several perimeter bolts constrain the bushing to a purely linear motion within the bearing and resist torsion and rebound separation.

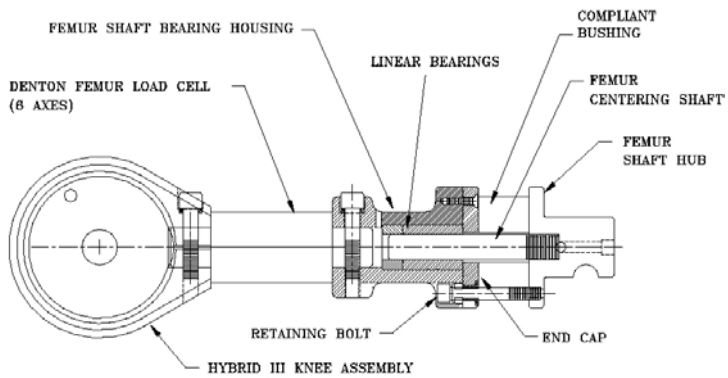

Figure 10 Femur dummy structure

RESULTS

THORAX TESTS RESULTS

Seven tests were performed for each speed (4.3-6.7 m/s). Figure 11 shows the impact force vs. thorax penetration measured by the THOR instrumentation. Deflection of the ribcage is measured at four different points. Deflection at these points is measured using the CRUX units, which assess the deformation in three orthogonal directions. In both figures, the Kroell corridors (Lobdell et al 1973) and dummy certification values are also displayed in order to evaluate dummy biofidelity.

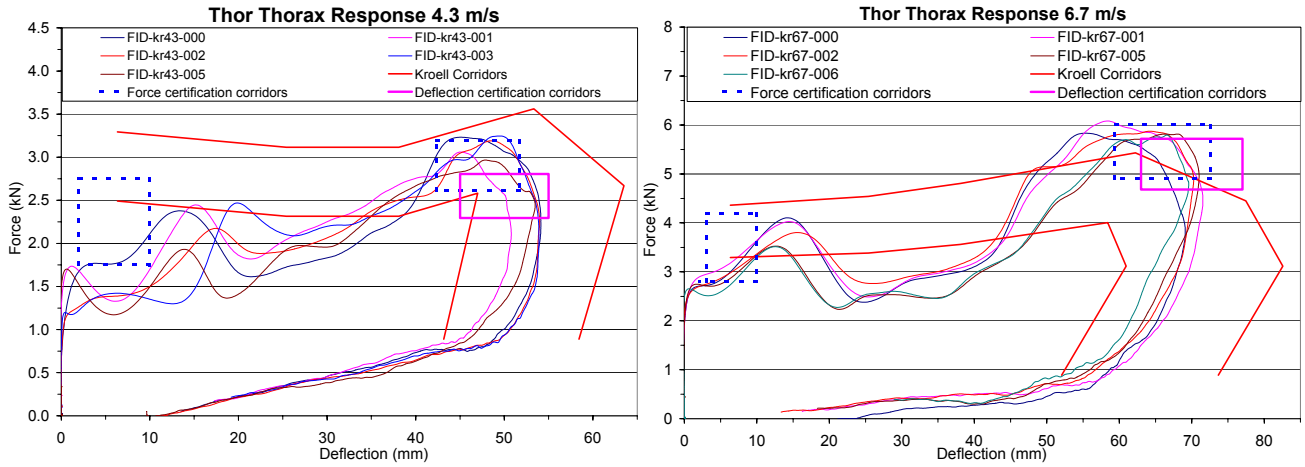

Figure 11 Thorax tests results.

The test were performed following the manufacterer indications in terms of temperature and duration between tests. During the performance of the test several problems occurred with the mid sternum assembly (Figure 2) and the bib's bolts, these problems obligated to disassembly the protective bib between test and to neglect several tests results. Table below shows where problems were found and those in which dummy thorax was disassembled to check the rib cage.

Tests reference	Thorax disasseembly after test	Dummy failure	Result test included in study
Fid-kr43-000	NO		YES
Fid-kr67-000	NO		YES
Fid-kr43-001	NO		YES
Fid-kr67-001	YES	NO	YES
Fid-kr43-002	NO		YES
Fid-kr67-002	YES	NO	YES
Fid-kr43-003	NO		YES
Fid-kr67-003	YES	Problems with bib's bolts to attach the mid sternum assembly	NO
Fid-kr43-004	NO		NO
Fid-kr67-004	YES	Detachment mid sternum mass	NO
Fid-kr43-005	NO	NO	YES
Fid-kr67-005	YES	NO	YES
Fid-kr43-006	YES	Detachment mid sternum accelerometer mount	NO
Fid-kr67-006	YES	NO	YES

Table 2. Kroell tests comment.

- The results of tests performed at 4.3 m/s show that, at low deflection level, the response of the dummy thorax has much more variability. At such levels, the THOR dummy does not follow the initial peak force specified by the certification corridors. Nevertheless, at high deflection, dummy thorax response is accurate, meeting the certifications corridors and having a humanlike response.
- The results of tests performed at 6.7 m/s show that, at medium deflection level, the dummy thorax response is softer than human body. As in the low speed tests, the dummy tested does not meet the initial peak force from certification corridors at these levels while, at high deflection, the dummy thorax response meets certification corridors (not all tests) but has a stiffer response than Kroell corridors.

UPPER ABDOMEN TESTS RESULTS

The response of the upper abdomen is plotted against Nusholtz et al. corridors (1994). Impact force is plotted versus deflection measured by dummy instrumentation. THOR dummy is fitted with a string potentiometer to measure the deflection of the upper abdomen as was noted above. This string

potentiometer is situated above the impact point location see Figure 12. Results of these tests are included in Figure 12. Eight tests were performed, however, due to durability problems found in the THOR dummy, only the results of the first four tests are included.

The results obtained may show that the response of the THOR's upper abdomen is stiffer than the human response and that the maximum penetration measured by the upper abdomen string potentiometer is lower than the penetration measured by Nusholtz. This issue will be discussed at a later stage but the authors believe that the response of the upper abdomen of the dummy is really stiffer than the human response and that there are significant differences between the way in which Nusholtz measured penetration and the way the certification procedure suggests to do it.

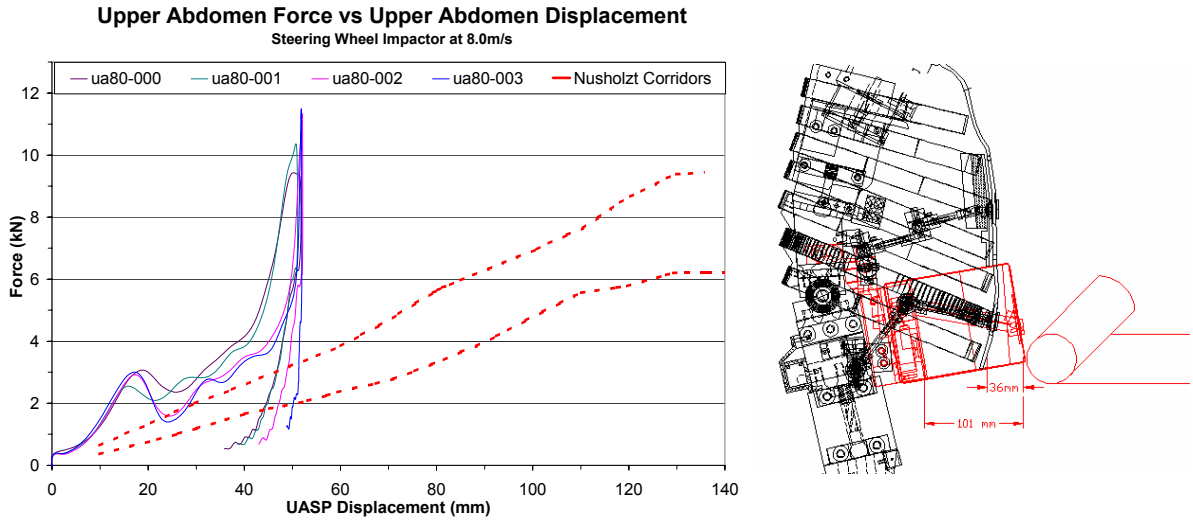

Figure 12 Upper abdomen tests results.

LOWER ABDOMEN BLUNT IMPACT TESTS RESULTS.

Following the test configuration specified by NHTSA the response requirements for the lower abdomen is presented as a force vs. penetration corridor. The response of the lower abdomen to blunt impact is plotted against NHTSA specifications and the corridors obtained by Cavanaugh et al. (1986). In Figure 13 force vs. penetration response of the lower abdomen is included. The THOR lower abdomen incorporates instrumentation (DGSP) to measure the three-orthogonal displacement of the region at two different points. This instrumentation was used to register the lower abdomen penetration, as suggested in the dummy certification procedure, see Figure 13.

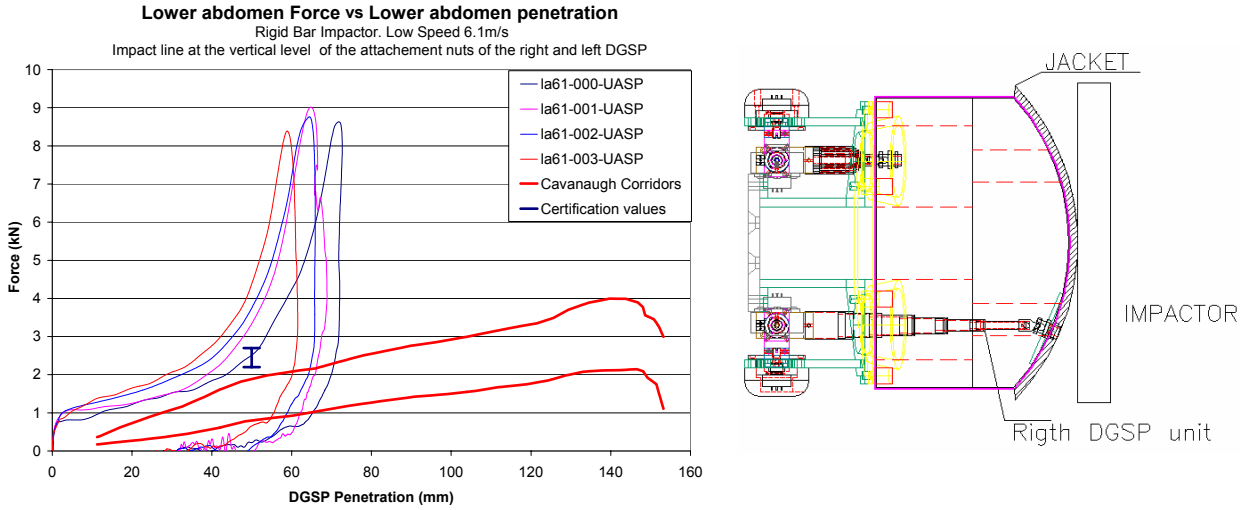

Figure 13 Lower abdomen blunt impact tests results.

As in the case of the upper abdomen, the lower abdomen presents a stiffer behaviour than human response obtained by Cavanaugh. Penetration measured by the DGSP is much lower in the dummy than in humans. This subject will also be discussed afterwards.

Figure 14 illustrates the sensitivity analysis carried out to the dummy lower abdomen instrumentation. As was commented above, impact point location was moved up to 30 mm above and below of the certification position in 10 mm steps. The main conclusion of the sensitivity study is that the lower abdomen response is influenced by the impact point location.

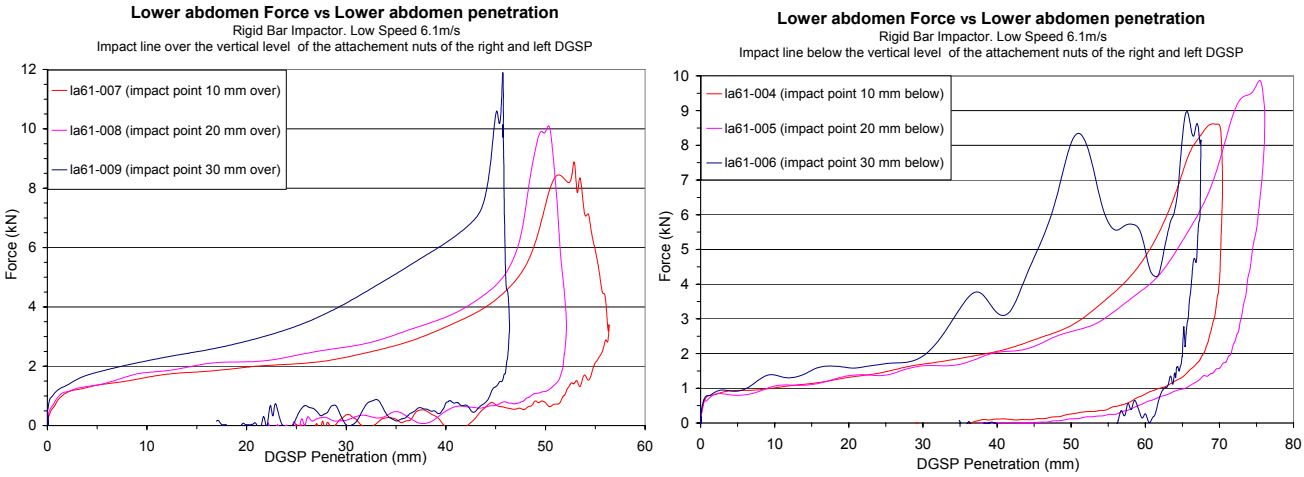

Figure 14 Lower abdomen sensitivity tests results

Result of test la61-006 presents an unusual peak force. After the video analysis it can be drawn that force peak is due to the contact of the impactor device with the upper frontal lip of the pelvis flesh.

LOWER ABDOMEN BELT LOADING TEST RESULTS

This kind of test is not included in the set of tests required for dummy certification to verify the proper response of the dummy. It is included in this study since the three possible elements that load the lower abdomen in frontal collision are the steering wheel, the airbag and seat belt. So, an accurate response of the frontal impact dummy to belt loading is believed to be also important.

The response of the lower abdomen under belt loading is assessed as a load vs. deflection function. In the figures of the performed tests, the force measured by the load cell located in the cable (acceleration compensated) and the displacements of the cable are related. In the figures, dummy response is also compared with Rouhana et al (1989) results (Figure 15).

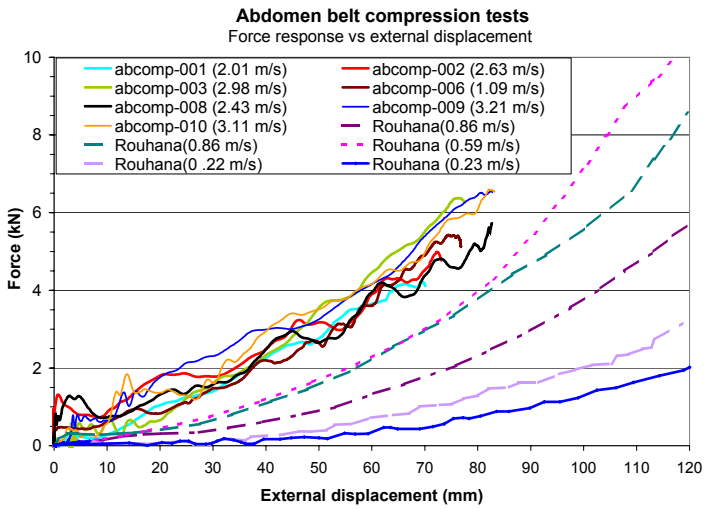

Figure 15 Lower abdomen under belt loading tests results.

The response of the dummy lower abdomen is stiffer than the results obtained by Rouhana. The Rouhana results must be taken as a reference since they were obtained as results scaled to human subjects from tests performed with dead swine. Taking into account the post-morten muscle deterioration it is reasonable that the dummy thorax is being stiffer than data obtained by Rouhana. It can be concluded that the response of the dummy is not velocity dependent while the swine lower abdomen response is clearly affected by the velocity of the impacting belt.

KNEE FEMUR TESTS RESULTS

The results obtained for both left and right knees and femurs are showed in Figure 16. In this figure, peak contact force versus impact energy is plotted.

Results obtained by Horsch and Patrick (1976) are also included. Additionally, data obtained by Haut and Atkinson (1985) are presented in the same figure in order to evaluate the biofidelity of the THOR femur. These data are divided in two groups: tests where fractures were found after the tests and those where no gross damages were found. The comparison shows that there is a good agreement between the test results of the THOR tests and the biomechanical data. Repeatability between both femurs is excellent.

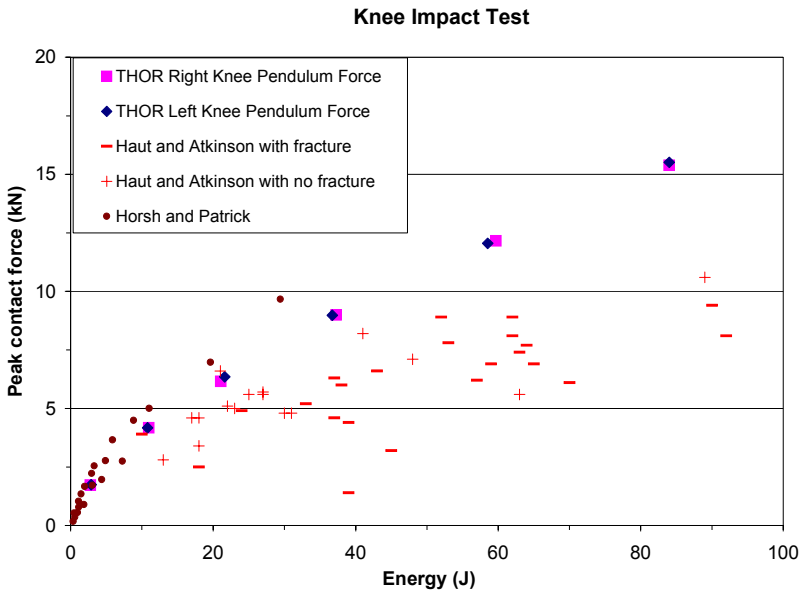

Figure 16 Knee femur tests results

DISCUSSION

A general review of the THOR response is presented in this paper. Dummy response is evaluated in different ways according to the EEVC WG12 proposal and NHTSA tests configuration. The dummy is evaluated against NHTSA certification, and data from tests performed with PMHS in similar test configurations. An in depth analysis of the dummy test set up is carried out to verify whether NHTSA test conditions and results are similar to those related in the literature.

THORAX TESTS

Results obtained in the thorax tests at low and high energy levels show that the response of the thorax at low deflections has wide variability with several peaks in the loading process in the deflection range of 10-40mm (see Figure 11).

Comparing these results with THOR certification test results, it seems that this behaviour is unusual. Tests were performed alternately at high and low speed and during the performance of test fid-kr67-004 the mid sternum mass became detached. Previous test results may be highly affected by a probable increasing detachment of the mid sternum mass during the tests. This is the reason why the results of these tests have been neglected (see Table 2). The response of fid-kr67-003 test is neglected too due to problems with the bolts that attach the whole mid sternum assembly to the bib. The authors

believe that part of the variability could be due to the disassembly and assembly of the dummy rib cage between tests. The play in the assembly may affect the thorax dummy response.

Although the response of the thorax of the THOR dummy is slightly less stiff at low deflection levels than results obtained by Lobdell et al. (1973), similarities can be found between dummy response and PMHS.

The force vs. time and force vs. thorax deflection responses provided in the literature show a three-part response to impact (an initial peak force followed by a force plateau and a later peak force). As the initial peak force is strongly influenced by the compressibility of superficial tissue overlying the bony parts of the thorax (wide variability in specimens, male, female, age etc.), these initial peak forces were rounded off subjectively in the final corridors presented by Lobdell et al (1973). However, the other two phases of the corridor represent accurately the dataset.

It is related in the literature that at both energy impact levels, the curve response was similar, but the area involved in the force-deflection curve was different. The higher the impact velocity for a given striker mass, the higher the average force produced. Dummy response is affected by impact velocity in the same way that is reported in the literature.

The dummy response is different in terms of the shape of the loading curve. In tests performed at 4.3 m/s the force plateau in the force-time curve described by Kroell et al. (1971, 1974) is not seen. It is even clearer in the force-deflection curve where, after the initial force peak, the dummy force response increases continuously at a constant rate until the maximum force value. In tests performed at 6.7 m/s after the initial force peak there is a force plateau followed by the final force peak. Thus, thorax dummy should be modified in order to obtain more humanlike response at both impact velocities.

UPPER ABDOMEN TESTS

During the performance of this set of tests, the thoracic instrumentation bracket, that supported the upper abdomen foam and the upper abdomen string potentiometer, was broken (in particular during performance of the ua80-004).

The results of four tests are included in the Figure 11. Comparing these results with the THOR certification test results, it is possible to conclude that the response of the two first tests ua80-000-1 is the actual normal response of the THOR dummy while results of test ua80-002-3 are not. Perhaps during the performance of the tests ua80-002-3, an increasing pre-failure bending process of the thoracic instrumentation bracket could explain why upper abdomen response in these tests is softer, although the maximum force peaks are higher, and why these values are out of the certification corridors.

It is necessary to clarify before evaluating the biofidelity of the upper abdomen of the THOR dummy that, although set up configuration in both test, dummy and PMHS, is the same, the way the penetration in upper abdomen is measured is different. While in Nusholtz tests, the penetration was measured at the impact point (using the moving frame concept, see Nusholtz et al (1986)). In the THOR dummy tests, the upper abdomen penetration is measured by the upper abdomen string potentiometer located a few centimetres above the impact point location (see Figure 12). In addition, the anterior offset of the THOR jacket from the abdominal instrumentation may affect this difference. To address this difference, a video tracking of the upper abdomen tests was done. In Figure 17 the force vs. penetration response curves are included, with the force measured during the tests and the penetration calculated with the video tracking technique.

The tracking study denotes that penetration in the impact point is higher than penetration measured by the upper abdomen string potentiometer. A stiffness of the upper abdomen that could be considered constant for deflections up to 40-50 mm is related in the literature. Above this deformation level and due to the variability in the specimens, the response curves show considerable differences. The response of the THOR upper abdomen is similar to the PMHS for penetrations below 70 mm and, at this point, the force response of dummy upper abdomen increases rapidly without a high increment in the penetration, looking at the Figure 12 it can be concluded that at this deflection level the foam of the upper abdomen is almost totally compressed putting the load on the dummy rigid column and generating higher loads than in PMHS tests.

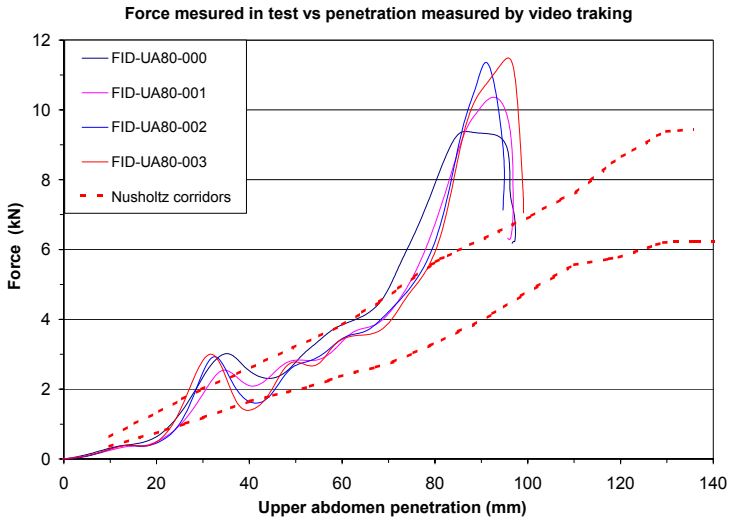

Figure 17 Results of upper abdomen tests using video tracking techniques.

Figure 17 shows several force peaks at a deflection range of 30 mm. At this deflection level the pendulum impacts with the lower ribs see Figure 12. The authors consider that the impact with the lower ribs is the origin of these peaks.

An in-depth study of the high speed video shows that, up to penetrations of 70 mm, only deformation of the upper abdomen occurs, while, for higher penetrations, the abdomen foam bottomed out against the bracket support moving the whole dummy, thus at this moment, the effective mass is notably increased. In PMHS tests, the force responses were similar until penetrations of 40-50 mm, for higher penetration levels, force response presented wide variability depending on the anthropometry of the specimen tested.

LOWER ABDOMEN IN BLUNT IMPACT

Taking into account the results obtained in lower abdomen tests (Figure 13) it seems that the response of the THOR lower abdomen to blunt impact is much stiffer than response of PMHS obtained by Cavanaugh et al (1986). Figure 13 shows impact force vs. penetration measured by the lower abdomen instrumentation (DGSP) of the THOR dummy. As in the case of the upper abdomen, the way the abdomen penetration is measured in the NHTSA test configuration is different to the original test set up. Again, a video tracking study of the lower abdomen tests (see Figure 18) has been performed in order to obtain the penetration in these tests as it was done by Stalnaker and Cavanaugh in the test performed with PMHS.

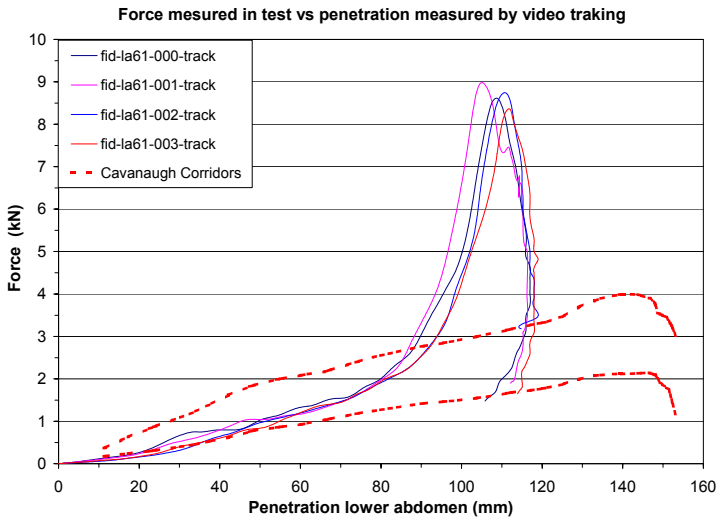

Figure 18 Results of lower abdomen tests using video tracking techniques.

The results of the video tracking study reveal that the response of the lower abdomen is humanlike up to penetration of 70-80 mm. As in the case of the upper abdomen, at this level of penetration the foam is almost totally compressed (see Figure 6) and the force response may be assumed to be the force needed to move the whole dummy and not only the one due to abdomen penetration stiffness.

Regarding the sensitivity study, it seems to be clear that differences of 10 mm in location of the impact point is enough to obtain different force responses. This behaviour may be affected by the inclusion of anatomical structures like the thoracic cage when moving up and the pelvis box when moving down (see Figure 19).

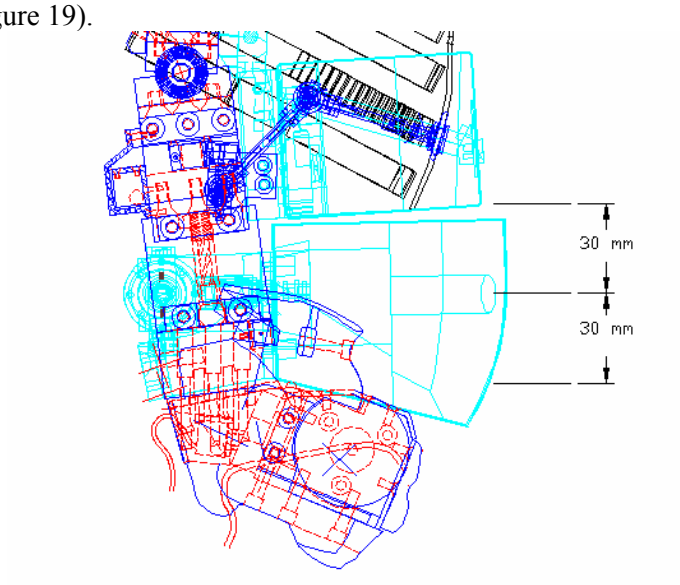

Figure 19 Lower abdomen structure

LOWER ABDOMEN UNDER BELT LOADING

In the Rouhana tests results it can be seen that force response of the abdomen is especially affected by the speed of the impacting belt, see Figure 15. The tests on which Rouhana based his corridors were performed at lower impact velocities than tests performed in this study. Results obtained in this paper not only do not illustrate this dependence with the impact velocity but also show a stiffer response of the dummy lower abdomen than humans. This stiffer response could be explained by the lack of muscle tone in cadavers.

KNEE IMPACT

Femur response can be considered good in terms of biofidelity, with the THOR femur response (Figure 16) between the results obtained by Horsch and Patrick (1976) and Haut and Atkinson (1995) in PMHS. In addition, femur repeatability has been found to be excellent.

CONCLUSIONS

Several tests were carried out to evaluate the biofidelity of the thorax, abdomen and femur of the new frontal impact dummy THOR as part of the FID project. The results obtained have been compared with NHTSA certification requirements and the most up-to-date information concerning human responses.

Regarding thorax tests, it can be concluded that the dummy response for deflection levels up to 30 mm is softer than PMH response. During the tests, failure occurs with the mid sternum assembly, the attachment of the mid sternum mass and the protective bib. Because of these problems dummy thorax was disassembled and reassembled between tests. The initial peak force and the loading curve can be affected by the detachment of the mid sternum mass while, the high variability of the response can be explained by the play in the assembly of the thorax.

The usage of the CRUX units (THOR thorax instrumentation device) to measure chest deflection seems to be appropriate.

Concerning the upper abdomen tests, only two of the eight tests properly reflect the response of the dummy, while the results of the other six tests were rejected due to durability problems. Although both NHTSA and Nusholtz test set up is the same, the point in which the upper abdomen penetration is measured is different. This may cause confusion when dummy response is compared with the data registered with PMHS.

The performed video tracking study has indicated that THOR upper abdomen response is slightly different to PMHS response up to 70 mm of penetration. Response for higher penetration levels does not represent upper abdomen response but the force necessary to move the whole dummy. Upper abdomen depth should be increased to improve the dummy response for higher penetration levels.

Related to the lower abdomen response, the same conclusion can also be drawn. Although the same test configuration has been used, the way the lower abdomen penetration is measured differs. Due to this reason, lower abdomen penetration, measured with the DGSP device used in the THOR dummy, seems not to be comparable with dummy abdomen penetration data registered by Cavanaugh.

Video tracking study denoted that the lower abdomen response to blunt impact is humanlike up to penetration of 80 mm. In this phase, the dummy response follows closely the corridor lower limits. This fact suggests that an increase of the abdomen stiffness in these initial moments may reduce the maximum load peak and therefore, improve dummy abdomen biofidelity. As in the case of the upper abdomen, for higher penetration levels, the force obtained represents the force necessary to move the whole dummy.

The lower abdomen sensitivity study has revealed that the response of the lower abdomen is quite influenced by the impact location for the parameters, force response and penetration. This trend becomes more pronounced when the impact point location is moved upwards with respect to the impact location point described in the NHTSA test procedures.

The response of the knee and femur is accurate in terms of biofidelity. All the twelve tests carried out at different energy levels (six in each femur) are in agreement with the data found in the literature recommended by the FID consortium. However, in recent studies carried out by Rupp et al. (2003) new corridors for knee femur response have been defined. Further in-depth studies should be done taking into account this new data.

The results of this evaluation and that of other partners in the FID project, have been used as input for dummy modification work. Further verification tests will be performed when this updated dummy will become available.

ACKNOWLEDGMENTS

This work is carried out under the FID "Improved Frontal Impact Protection through a World Frontal Impact Dummy", contract funded by the European Commission under the Transport RTD Programme of the 5th Framework Programme, Project Nr. GRD1-1999-10559.

REFERENCES

[1] ADRIA Partners "Advanced crash Dummy Research for Injury Assessment in frontal test conditions", PL96-1074, Final Summary Report, (2000).

[2] Cavanaugh, J., Nyquist, G., Goldberg, S., King, A. "Lower Abdominal Tolerance and response". 30th Stapp Car Crash Conference. SAE 861878, (1986).

[3] FID Consortium "Response to assess the biofidelity of a Anthropomorphic Frontal Impact Dummy", (2002).

[4] FID Partners "Biofidelity impact response requirements for an advanced mid-size male crash test dummy" EEVC Working Group 12 Report, 2003 ESV Paper Nº 76, (2003).

[5] GESAC "THOR ALPHA 50% User's manual- version 1.1" (2001).

[6] GESAC "Trauma assessment device development program" THOR certification manual, Report Nº GESAC-01-05. (February 2001).

[7] Haffner, M. Eppinger, R.; Rangarajan, N.; Shams, T.; Artis, M.; Beach, D "Foundations and elements of the NHTSA Thor ALPHA ATD design". National Highway Traffic

Safety Administration, Washington, D.C./ Transportation Department, Washington, D.C./ GESAC, Boonsboro, Md. 2001. 12 p. ESV: 17th International Technical Conference on the Enhanced Safety of Vehicles, Report No.: 458, (2001).

[8] Haut C., Aktkinson J. "Insult to the Human Cadaver Patellofemoral Joint: Effects of Age on Fracture Tolerance and Occult Injury" SAE 952729, (1995).

[9] Horsch J., Patrick L. "Cadaver and Dummy knee impact response", Stapp Car Crash Conference SAE 760799, (1976).

[10] Kroell, C.K, Schneider D.C, Nahum A. M "Impact Tolerance and Response of the Human Thorax", Proceedings of Fifteenth Stapp Car Crash Conference, SAE 710851, pp84-134, (1971).

[11] Kroell, C.K, Schneider D.C, Nahum A. M "Impact Tolerance and Response of the Human Thorax II", Eighteen Stapp Car Conference, SAE 741187 (1974).

[12] Lobdell, Kroell et al. "Impact response of the Human Thorax" In Human Response Measurement and Simulation. Edited by W.F. King and Mertz H.J.Plenum Press. pp201-245, (1973).

[13] Miller, M. A. "The biomechanical Response of Lower Abdomen to Belt Restrain Loading". The Journal of Trauma, vol 29 No. 11, (November 1989).

[14] Nusholtz, C.K., Allen, S.D., Warner, C.Y. and Perl, T.R." Interrelationship of Velocity and Chest Compression in Blunt Thoracic Impact to Swine I" 30th Stapp Carr Crash Conference Proceedings, pp 123-142. SAE Parper Nº 861882, (1986).

[15] Nusholtz, G., Kaiker, P., Huelke, D., Suggitt, B. "Thoraco-Abdominal Response to Steering",29th Stapp Car Conference, SAE 851737, (1985).

[16] Nusholtz, G., Kaiker, P. "Abdominal Response to Steering Wheel Loading". 14th International Technical Conference on Enhanced Safety of Vehicles. (May 1994).

[17] Rangarajan N, White R, Shams T, Beach D, Fullerton J, Haffner M, et al. "Design Criteria, Design, and Performance of the THOR Advanced Frontal Crash Test Dummy Thorax and Abdomen Assemblies" Paper No. 98-S9-O-12; 16th International Technical Conference on the Enhanced Safety of Vehicles; Windsor, Ontario; (1998).

[18] Rouhan, S.W., Viano, D.C., Jedrzejczak, E.A., and McCleary, J.D., " Assessing Submarining and Abdominal injury Risk in the HybridIII Family Dummies" Proceedings of the 33rd Stapp Car Crash Conference pp 257-280, SAE Technical Paper 892440 (1989).

[19] Rupp J.D., Reed M.P., Madura N.H., Schneider L.W., "Comparison of knee/femur force-deflection response of the THOR, Hybrid-III and human cadaver to dynamic frontal-impact knee loading." ESV 2003 Paper nº160.

[20] Stalnaker L., Ulman M. S., "Abdominal Trauma-Review, Response, and Criteria" 29th Stapp Car Conference, SAE 851720, (1985).