OUT-OF-POSITION VEHICLE OCCUPANTS MODELS IN A MULTIBODY INTEGRATED SIMULATION ENVIRONMENT

Miguel Silva and Jorge Ambrósio
Institute of Mechanical Engineering – Instituto Superior Técnico, Lisbon, Portugal

ABSTRACT

New solutions for intelligent restraint systems, able to recognize vehicle occupants size and position, require that: suitable biomechanical models are used; initial occupant anatomical segments positions are properly set; realistic contact models are used; interactions between vehicle and occupants are accounted for; models of restraint systems are included in the simulation. Here a procedure for the evaluation of the initial positions of biomechanical models for the simulation of out-of-position occupants is proposed together with a vehicle-occupant integrated numerical environment, which allows modeling vehicle and occupants in complex crash scenarios. This methodology is demonstrated with the analysis of a vehicle rollover with occupants included.

Key words: Multibody, Contact, Occupants, Photogrammetry, Rollover Accidents.

The evaluation of the full spatial position of occupants, required as initial conditions for the biomechanical models used in the dynamic analysis, is done based on the use of two or more synchronized video cameras. After acquiring the synchronized images a digitalization process is used to recover the projected positions of a given set of anatomical points. The spatial position of the biomechanical model anatomical points are then recovered using the direct linear transformation method (Aziz and Karara, 1971). Before these initial positions can be used in the dynamic simulation of the vehicle occupants a procedure to find the kinematically consistent initial positions and velocities of the biomechanical model anatomic segments is also presented.

A whole body biomechanical model with joint penalized motion is used in order to prevent that the biomechanical segments of the occupant model achieve physically unfeasible relative orientations (Silva, Ambrósio and Pereira, 1997). The model also includes the description of a set of contact surfaces that allow for the complete description of the complex interactions between the occupant and the vehicle. An appropriate rigid body contact law, proposed by Lankarani and Nikravesh (1994), which includes the compliance of the contacting surfaces, energy dissipation effects and friction forces between contacting surfaces, describes these interactions.

The biomechanical model, the vehicle model and any restraint system are described in a single multibody integrated environment based on the use of natural coordinates, which do not require rotational coordinates to define the full three dimensional motion of rigid bodies in space (Jalon and Bayo, 1994). The advantages of using this description also include the simplicity of the equations obtained, the ease of integrating the actions that develop between the system components and the implicit definition of most of the kinematic constraints. The complex interactions between occupants, vehicle and any contacting obstacles are extremely nonlinear taking to the limit the stability and reliability of the numerical procedures involved. Special care is used in ensuring that numerical procedures, applied to the solution of the equations of motion, favor the stability of the solution.

The methodology proposed is demonstrated in the simulation of a vehicle rollover with belted occupants inside. This type of scenario has been the object of many numerical and experimental studies, represents one of the most complex interactions between vehicle, occupant and terrain. Using a multibody code Silva et al. (1997) present an integrated occupant and vehicle model where the

coupling between the occupant and the vehicle motion is analyzed. In a survey of current procedures for rollover studies, Day and Garvey (2000) identify a number of simulation procedures to model vehicle rollovers. The preferred numerical tools used in rollover analysis are identified as being commercial multibody computer codes such as MADYMO (1996) and ADAMS (1998), being the results often compared with tests using FMVSS 208 rollovers. Among these, Renfroe et al. (1998) report the agreement between multibody models results and measured data in an experimental rollover tests, actually showing a good correlation between the videotaped and simulated motion. With the objective of comparing the kinematics and injury responses of occupants in rollovers Parenteau, Gopal and Viano (2001) used the multibody code MADYMO (1996) to model the occupant, vehicle and ground interaction. Such as in the simulation results reported by Renfroe et al. (1998) or those surveyed by Day and Garvey (2000), the correlation between experimental and numerical results is obtained by fine-tuning the numerical models.

Due to the high nonlinearity of the vehicle behavior and the interactions developed during contact, he experimental rollover tests are hardly repeatable. For instance, two tests of a truck rollover carried during the Summer and the Winter at the Transportation Research Center of Ohio (1985, 1986) under the same exact testing conditions lead to roll motions of the vehicle corresponding to three and half turns and half turn respectively. The simulated motion of the vehicles is greatly influenced by changes in the friction coefficients and in the equivalent stiffness of the impact laws used in the simulation tools, actually showing the very high sensitivity of the numerical models to this type of parameters (Ambrósio, 2000). Therefore, it is not surprising that most of the rollover outcomes can be simulated with a high degree of correlation by numerical models.

In this work, numerical methodologies used for multibody modeling of vehicle and biomechanics impact scenarios are reviewed. Different out-of-position occupants are used in the several simulations presented. The numerical tools proposed are a contribution for the definition of the initial position of the full three-dimensional biomechanical models used for the evaluation of occupant restraint systems and for the development of more advanced integrated simulation environments that include occupants and vehicles. In the process of developing the work presented some shortcomings are also identified. These include the difficulties on using the sets of multiple synchronized cameras in small closed space as the passenger compartments in a normal vehicle, the sensitivity of the simulation results to the contact law parameters used in the models and the stability of the numerical procedures applied.

APPLICATION CASE: VEHICLE ROLLOVER WITH OCCUPANTS

The scenario in which the methodology described in this work is demonstrated is a rollover situation, depicted by Fig. 1, first proposed by Pereira et al. (1987) and later also analyzed by Ambrósio et al. (1990). The vehicle data, reported by Pereira et al. (1987), is used in the different models developed and the outcome of the simulations compared with that of the experimental test carried by the Transportation Research Center of Ohio (1985). This crash case is characterized by the existence of multiple impacts and by a complex interaction among the vehicle, occupants and ground that can hardly be represented by the more traditional approach of simulating the vehicle rollover first and then using the crash pulse as input for the occupants dynamic analysis.

The analysis of the vehicle rollover requires, in the first place, that a proper multibody formulation is used to describe the moving components of the vehicle and occupant models. Secondly, a biomechanical model suitable to represent the vehicle occupants during the complex motions that occur during the rollover is also necessary. Thirdly, the initial positions and velocities of all moving components of the vehicle and occupant models must be defined. In this work particular attention is paid in the evaluation of the initial positions of the occupants being proposed a spatial reconstruction technique based on photogrammetry. Fourthly, a reliable contact model must be used in order to represent the interactions among the different moving components of the models. Finally, the occupants' restraints must be included in the vehicle and occupant integrated model.

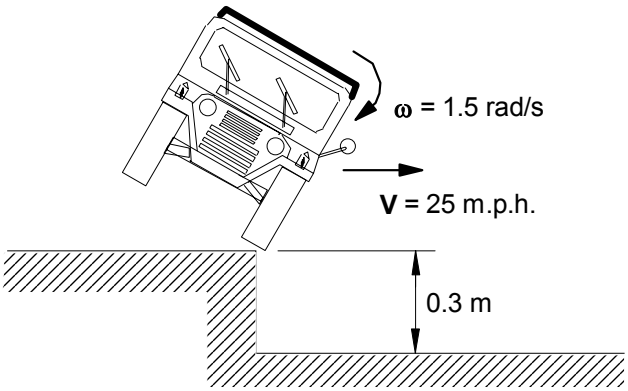

Fig. 1 - Rollover crash scenario.

SOLUTION OF THE MULTIBODY EQUATIONS OF MOTION

A multibody system is a collection of rigid bodies joined together by kinematic joints and force elements as depicted in Fig. 2. For the ith body in the system, $\mathbf{q}_i$ denotes a vector of coordinates which contains the natural coordinates that represent the rigid bodies poisitions and orientations using the positions of a set of points and vectors (Jalon and Bayo, 1994). A vector of velocities for a rigid body i is defined as $\mathbf{v}_i$. The vector of accelerations for the body, denoted by $\dot{\mathbf{v}}_i$, is the time derivative of $\mathbf{v}_i$. For a multibody system containing nb bodies, the vectors of coordinates, velocities, and accelerations are $\mathbf{q}$, $\mathbf{v}$ and $\dot{\mathbf{v}}$ that contain the elements of $\mathbf{q}_i$, $\mathbf{v}_i$ and $\dot{\mathbf{v}}_i$, for i=1, ...,nb.

The kinematic joints between rigid bodies are described by mr independent constraints:

$$\mathbf{\Phi}(\mathbf{q}) = \mathbf{0} \tag{1}$$

The time derivatives of the constraints yield the velocity and acceleration equations.

$$\dot{\mathbf{\Phi}} = \mathbf{D}\mathbf{v} = \mathbf{0} \tag{2}$$

$$\ddot{\mathbf{\Phi}} = \dot{\mathbf{D}}\mathbf{v} + \mathbf{D}\dot{\mathbf{v}} = \mathbf{0} \tag{3}$$

where $\mathbf{D}$ is the Jacobian matrix of the constraints. Equations (1-3) describe all kinematic restrictions between the different components of the multibody system.

The equations of motion for the multibody system are written (Jalon and Bayo, 1994)

$$\mathbf{M}\dot{\mathbf{v}} - \mathbf{D}^T\boldsymbol{\lambda} = \mathbf{g} \tag{4}$$

where $\mathbf{M}$ is the inertia matrix, $\boldsymbol{\lambda}$ is a vector of Lagrange multipliers, and $\mathbf{g}=\mathbf{g}(\mathbf{q},\mathbf{v})$ contains the gyroscopic terms and the forces and moments that act on the bodies. Equation (4) must be solved together with equation (3) to obtain the system accelerations and the Lagrange multipliers, associated with the joint reaction forces.

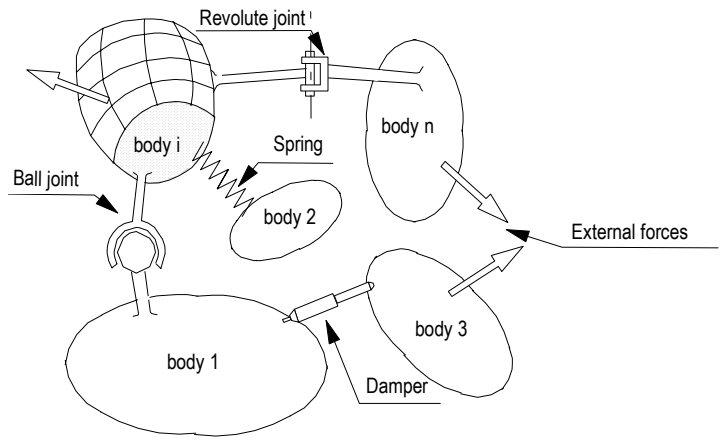

Fig. 2 - Schematic representation of a multibody system

The forward dynamic analysis of a multibody system requires the initial conditions of the system, i.e. the position vector $\mathbf{q}^0$ and the velocity vector $\mathbf{v}^0$. Equations (3) and (4) are assembled and solved for the unknown accelerations and Lagrange multipliers, which are in turn integrated in time together with the velocities. This leads to the positions and velocities of the new time step. The process, shown in Fig. 3, proceeds until the system response is obtained for the analysis period.

BIOMECHANICAL MODEL FOR THE VEHICLE OCCUPANTS

The spatial reconstruction of the initial positions of the occupants requires the use of a suitable biomechanical model. The model is also used throughout the impact simulations. The biomechanical model includes 12 anatomic segments being the relative motion between adjacent bodies limited to be inside generalized cones of feasible motion (Silva, Ambrósio and Pereira, 1997). The model is general and accepts data for any individual. The information required to assemble the equations of motion of the model includes the mass and inertia of the biomechanical segments, their lengths, location of the body-fixed coordinate frames and the geometry of the potential contact surfaces, as pictured in Fig. 4. The data is hold within a database that can be used for different individuals.

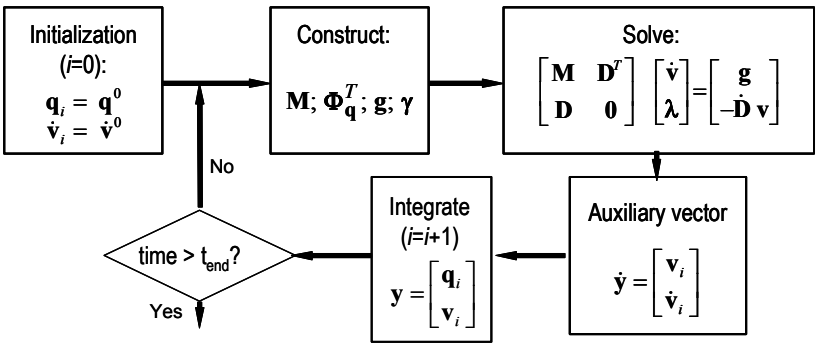

Fig. 3 – Solution of the forward dynamic analysis of a multibody system.

In contact/impact simulations the relative kinematics of the head-neck and torso are important to the correct evaluation of the loads transmitted to the human body. Consequently, the head and neck are modeled as separate bodies and the torso is divided in two bodies. The hands and feet do not play a significant role in this type of problems and consequently are not modeled independently of the adjacent segments. The model is described using 12 rigid bodies defined by 16 basic points and 17 unit vectors located at the articulations and extremities. A total of 99 natural coordinates are needed while 70 kinematic constraints are used in the definition of the rigid bodies. The result is a biomechanical model with 29 degrees of freedom. The dimensions of the model, included in the database, are represented in Fig. 4(c). In most cases, the effective link-lengths between two kinematic joints are used instead of standard anthropometric dimensions based on external measurements. The set of data concerned with the models referred are described in (Silva, Ambrósio and Pereira, 1997).

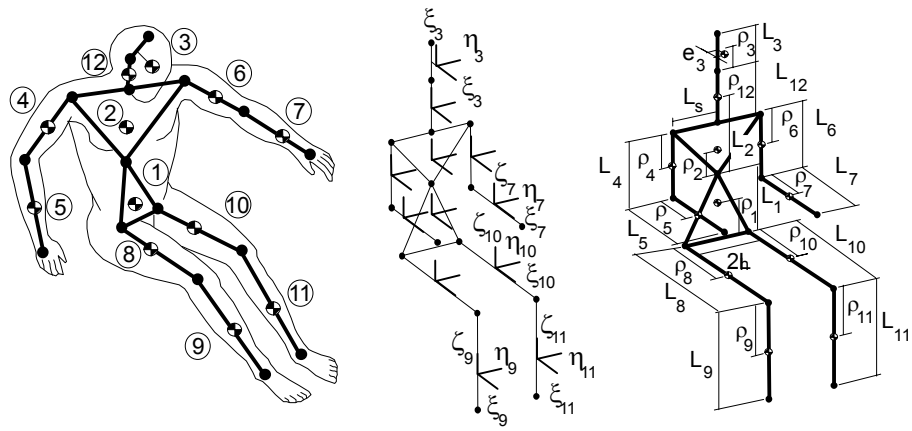

Fig. 4 - Three-dimensional biomechanical model for impact: (a) actual model; (b) local referential locations; (c) dimensions of the biomechanical segments.

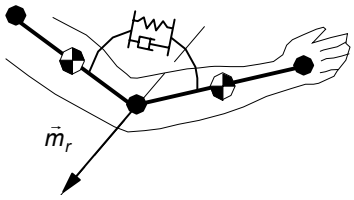

Fig. 5 - Joint resistance torque modeled using non-linear spring and damper.

The components of the multibody system are described by natural coordinates, which mean that each body is defined by the Cartesian coordinates of two or three points and two or one vector. By locating the points that define the rigid bodies of the biomechanical model coincident with the anatomical joints it is ensured that the spatial reconstruction of the model positions is obtained directly from the photogrammetric methodology applied, which is discussed later in this work.

In the biomechanical model no muscle activation is considered but the muscle passive behavior is represented by joint resistance torques. Physically unacceptable positions of the body segments are prevented by applying a set of penalty torques when adjacent segments of the model reach the limit of their relative range of motion. These are described by a viscous torsional damper and a non-linear torsional spring, located in each kinematic joint. For example, in the elbow of the model, represented in Fig. 5, the axis for the relative rotation of the lower and upper arm is represented. The torsional damper has a small constant damping coefficient j_i leading to a torque at each joint given by

$$\mathbf{m}_{d_i} = -j_i \, \dot{\boldsymbol{\beta}}_i \tag{5}$$

where $\dot{\boldsymbol{\beta}}_i$ is the relative angular velocity vector between the two bodies interconnected by joint i.

A constant torque m_{ri} that acts resisting the motion of the joint is applied to the whole range of motion in the dummy model (Silva, Ambrósio and Pereira, 1997). For the human joint this torque has an initial value which drops to zero after a small angular displacement from the joint initial position. The torque has a direction opposite to that of the relative angular velocity vector between the two bodies interconnected in the joint is given by

$$\mathbf{m}_{r_i} = -m_{r_i} \dot{\boldsymbol{\beta}}_i \, \left\| \dot{\boldsymbol{\beta}}_i \right\|^{-1} \tag{6}$$

Another moment, applied at the joint, is a penalty resisting torque m_{pi} which is null during the normal joint rotation. However, it increases rapidly, from zero to a maximum value, when the two bodies interconnected by that joint, reach physically unacceptable positions. The curve for the penalty resisting moment is represented qualitatively in Fig. 6.

All the anatomical joints of the biomechanical model have resisting and penalty torques similar to those described for the elbow joint. For the ball joints, such as the hips and shoulder, the penaly torques are defined when one of the segments tends to move outside of a generalized cone of allowable motion. Details of this model can be found on reference (Silva, Ambrósio and Pereira, 1997)

A set of contact surfaces is defined for the calculation of the external forces exerted on the model when the surfaces of the bodies contact other objects or different body segments. These surfaces are ellipsoids and cylinders with the form depicted by Fig. 7. When contact between components of the biomechanical model is detected a contact force is applied in the point of contact and with a direction normal to the surface.

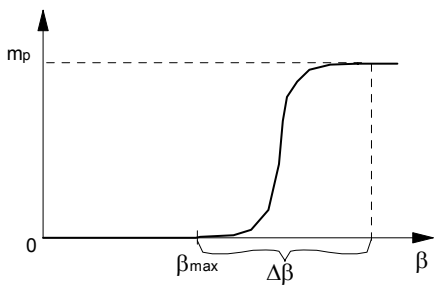

Fig. 6 - Penalty moment for the elbow.

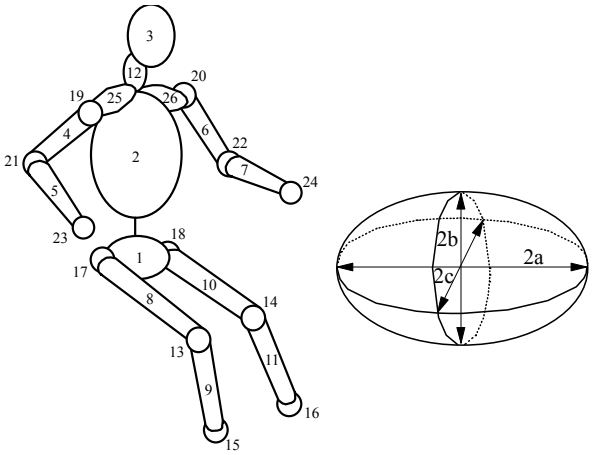

Fig. 7 - Representation of contact surfaces.

EVALUATION OF THE INITIAL POSITIONS OF THE VEHICLE OCCUPANTS

The development of intelligent restraint systems requires, among other aspects, that the anatomical characteristics of the occupants and their positions inside the vehicle can be monitored. In order to make available reliable analysis tools it is necessary that 'real life' positions of the vehicle occupants can be quantified and used in the multibody analysis program. The 'real life' vehicle occupants may take positions different from those for which the conventional restraint systems have been developed. It is in this sense that such occupants are called out-of-position. The process of recording the human body actual motion and to extract the position of its anatomical segments for every frame is designated by spatial reconstruction. Therefore, the problem of evaluating the positioning of the out-of-position occupant is solved by using spatial reconstruction techniques.

The most common techniques used for the spatial motion reconstruction are found in gait and sports motion analysis (Winter,1990 ; Nigg and Herzog, 1999 ; Allard, Stokes and Blanchi, 1995). The selection of a technique depends upon several factors such as the purpose of the analysis, the type of movement, the available time to obtain the results and the costs involved. Photogrammetry is the most frequently used technique. Video cameras are used, being the process of acquiring and digitizing images easily automated if markers, located at the anatomical joints and extremities, are applied (Nigg and Herzog, 1999). However, in the case of multiple oclusion of the markers or when the number of frames is very limited, the digitalization of the markers has to be done manually.

Contrary to the gait or sports applications of the photogrammetric techniques, where the motion of the subject is inside a large open volume, out-of-position occupants applications are characterized by a static position of the subjects and by the closed volumes where these are seated. Therefore, the use of spatial reconstruction automated techniques is very limited and all the data processing has to be handled in a differently from normal gait analysis. Here, four video cameras are used to capture the motion. The laboratory apparatus of cameras is schematically represented in Fig. 8. The cameras have a 60 Hz sampling frequency and are synchronized during the trials.

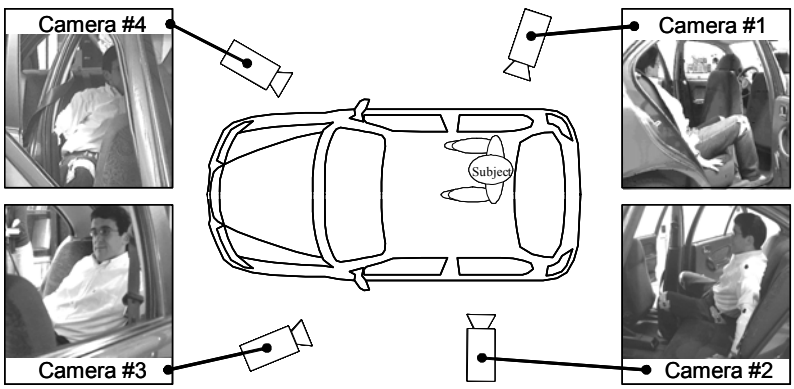

Fig. 8 – Vehicle and video cameras for the recording of the out-of-position occupants.

The images collected by a single camera are collections of two-dimensional information, resulting from the projection of a three-dimensional space into a two-dimensional one. The sequence of transformations that describe this projection, known as Virtual Camera (Hearn and Baker, 1994), is the mathematical equivalente of projecting a three-dimensional object into the plane of the camera, as shown in Fig. 9. Mathematically, the inverse of the transformation does not exist. Consequently, it is not possible to reconstruct the three-dimensional coordinates of a point in space from its two-dimensional projection in a single frame. Aziz and Karara (1971), proposed a solution for the reconstruction process called Direct Linear Transformation. This method uses the two-dimensional information, collected by two or more cameras, to reconstruct the coordinates of the anatomical points in space. For every anatomical point, each camera introduces a set of two equations, written as:

$$x_i = \frac{a_{1i}X + a_{2i}Y + a_{3i}Z + a_{4i}}{a_{9i}X + a_{10i}Y + a_{11i}Z + 1} \quad ; \quad y_i = \frac{a_{5i}X + a_{6i}Y + a_{7i}Z + a_{8i}}{a_{9i}X + a_{10i}Y + a_{11i}Z + 1} \tag{7}$$

where X, Y, and Z are the unknown Cartesian coordinates of the anatomical point in space, x_i and y_i are the coordinates of the projected point in the projection plane of camera i. Coefficients a_{1i} through a_{11i} are camera calibration parameters, which define the camera position, orientation, focal length and also account for distortion factors (Allard, Stokes and Blanchi, 1995). These coefficients are calculated through an initial calibration procedure that includes a reference structure with known position and dimensions. As the spatial positions of the calibration points are known in advance, the only unknowns of equation (7) are the calibration parameters. Since at least two cameras must be used, the number of available equations for the reconstruction of the Cartesian coordinates of a given anatomical point is greater than the number of unknowns. The spatial reconstruction of each anatomical point is obtained by minimizing the mean square deviation, obtained solving the set of equations (7), for the three unknown coordinates.

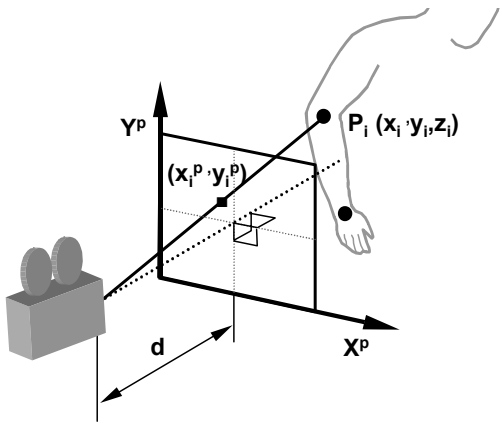

Fig. 9 - Camera projection plane.

The biomechanical model used in this work requires the reconstruction of the spatial position of 23 anatomical points for each frame of the analysis period. This set of points is depicted in Fig. 10, as well as the underlying kinematic structure of the model. The spatial position and orientation of the anatomical segments of the biomechanical model are obtained from the spatial positions of these reconstructed points.

The reconstruction procedure, does not guarantee that the distance between two anatomical points of the same rigid body, is kept constant for different frames. The uncertainty of the anatomical dimensions generate violations in the kinematic constraints of the biomechanical model. The kinematic data obtained from the reconstruction technique must be modified to ensure kinematic consistency with the structure of the biomechanical model (Silva and Ambrósio, 2001 ; Celigüeta, 1996). Taking advantage of the fact that the anatomical points coincide with the biomechanical model points that are used to define the anatomical segments, the transformation matrix that positions each body of the system with respect to a given referential is evaluated. Without lack of generality, in what follows, the anatomical characteristics of the 50%tile occupant are used. The next step in defining the initial position of the occupant consists in finding the position of an insertion point of the biomechanical model in the vehicle model, which is the mathematical equivalent of ‘seating the

occupant in the proper seat'. As the transformation matrix of this root body is available at this time, the initial position and orientation of the segment becomes fully known. The final step in the definition of the biomechanical model initial position is to position the remaining anatomical segments of the model, following the topological structure of the biomechanical model. Notice that, due to the use of natural coordinates, the anatomical joints are formed by having two adjacent bodies to share a point between them. Therefore, in a biomechanical branch, the insertion of a anatomical segment with respect to the previous one is automatically done, being its orientation known from the spatial reconstruction process. Then the initial values for the natural coordinates become fully known.

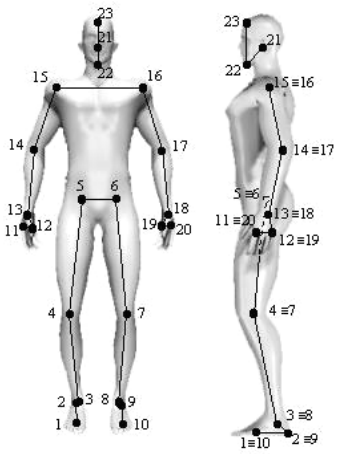

Fig. 10 - Set of 20 digitized points and kinematic structure.

In order to perform the dynamic analysis, the initial velocities of the anatomical points are also required. The velocities are obtained by solving equation (2). This procedure assures that the velocities obtained belong to the null space of the Jacobian matrix, making them consistent with the kinematic structure of the biomechanical model.

From Fig. 8 it is clear that using standard video cameras for a vehicle occupant does not allow observing all anatomical points necessary for the reconstruction process in all cameras. The problems in the reconstruction process can eventually be solved with a larger number of smaller cameras. However, this alternative introduces other sources of errors, such as large distortions of the video images and the need to develop a procedure that takes into account that not all anatomical points are visible in all images. To demonstrate the methodology presented here, instead of a complete vehicle it is used a vehicle seat and steering column and wheel to seat the occupant, as presented in Fig. 11. Notice that using this setup prevents many meaningful positions for the occupant from being obtained.

Fig. 11 – Vehicle seat used in the experimental setup to find the occupant initial conditions

With the setup described in Fig. 8 and the vehicle seat presented in Fig. 11, a seated occupant is asked to adopt seated positions similar to those that would be used when riding car in different situations. Among those,that are videotaped and reconstructed, the positions presented in Fig. 12 are selected and used in the application of the methodology to a vehicle rollover.

(a) (b) (c) (d) (e)

Fig. 12 – (a)-(d) Out-of-position occupants as viewed by the cameras and (e) spatial reconstructions.

CONTACT MODEL FOR THE VEHICLE AND OCCUPANT

The proper description of any crash phenomena is strongly dependent on the contact/impact model used to describe the interaction between the system bodies and the contacting surfaces. These contact models must not only be formulated in a form compatible with the multibody description used but also allow for the description of the local deformations, friction forces, energy dissipation while contributing for the stability of the numerical methods involved.

Let a body approach a surface during the motion of the multibody system, as represented in Fig. 13. Without lack of generality, let the impacting surface be described by a mesh of triangle patches. In particular, let the triangular patch, where node k of the flexible body will impact, be defined by points i, j and l. The normal to the outside surface of the contact patch is $\vec{n} = \vec{r}_{ij} \times \vec{r}_{jl}$.

Let the position of point k with respect to point i of the surface be

$$\mathbf{r}_{ik} = \mathbf{r}_k - \mathbf{r}_i \tag{10}$$

This vector is decomposed in its tangential component, which locates point k* in the patch surface, and a normal component, given respectively by

$$\mathbf{r}_{ik}^t = \mathbf{r}_{ik} - \left(\mathbf{r}_{ik}^T \ \mathbf{n}\right)\mathbf{n} \tag{11}$$

$$\mathbf{r}_{ik}^n = \left(\mathbf{r}_{ik}^T \ \mathbf{n}\right)\mathbf{n} \tag{12}$$

A necessary condition for contact is that point k penetrates the surface of the patch, i.e.

$$\mathbf{r}_{ik}^T \ \mathbf{n} \leq 0 \tag{13}$$

In order to ensure that a point does not penetrate the surface through its 'interior' face a thickness e must be associated to the patch. The thickness penetration condition is

$$-\mathbf{r}_{ik}^T \ \mathbf{n} \leq e \tag{14}$$

The condition described by equation (14) prevents that penetration is detected when the body is far away, behind the contact surface. The remaining necessary conditions for contact results from the need for the point to be inside of the triangular patch. These three extra conditions are

$$\left(\tilde{\mathbf{r}}_{ik}^t \ \mathbf{r}_{ij}\right)^T \ \mathbf{n} \geq 0 \ \ ; \ \left(\tilde{\mathbf{r}}_{ik}^t \ \mathbf{r}_{jl}\right)^T \ \mathbf{n} \geq 0 \ \text{ and } \left(\tilde{\mathbf{r}}_{ik}^t \ \mathbf{r}_{ki}\right)^T \ \mathbf{n} \geq 0 \tag{15}$$

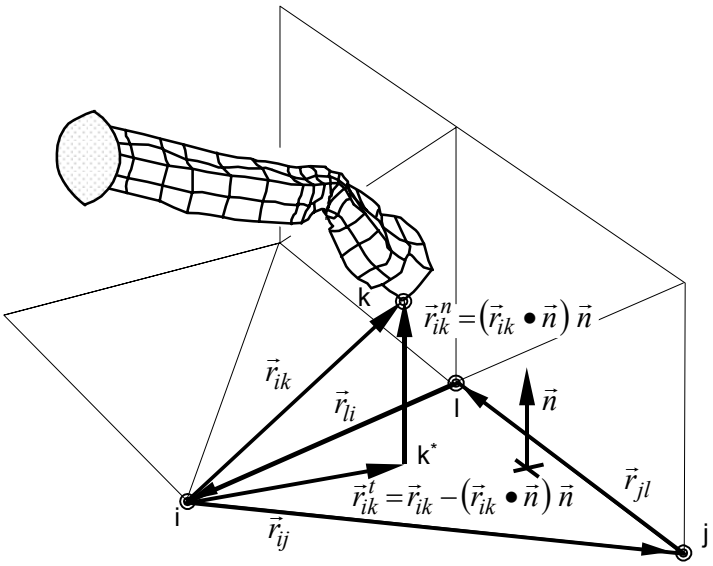

Fig. 13 - Contact detection between the point of a body and a surface

Equations (13) through (15) are necessary conditions for contact. However, depending on the contact force model actually used, they may not be sufficient to ensure effective contact.

A model for the contact force must consider the material and geometric properties of the surfaces, contribute to a stable integration and account for some level of energy dissipation. Based on a Hertzian description of the contact forces between two solids (Winmer, 1977), Lankarani and Nikravesh (1994) propose a continuous force contact model that accounts for energy dissipation during impact.

Let the contact force between two bodies or a system component and an external object be a function of the pseudo-penetration δ and pseudo-velocity of penetration $\dot{\delta}$. The contact force is

$$\mathbf{f}_{s,i} = K \quad \delta^n \left[1 + \frac{3\left(1 - e^2\right)}{4} \frac{\dot{\delta}}{\dot{\delta}^{(-)}} \right] \mathbf{u} \tag{16}$$

where K is the equivalent stiffness and $\mathbf{u}$ is a unit vector normal to the impacting surfaces. This force is a function of the impact velocity $\dot{\delta}^{(-)}$, stiffness of the contacting surfaces and restitution coefficient e. For a fully elastic contact e=1 while for a fully plastic contact e=0. The generalized stiffness coefficient K depends on the geometry material properties of the surfaces in contact. For instance, the contact between a sphere and a flat surface the stiffness is (Lankarani, Ma and Menon, 1995)

$$K = 0.424\sqrt{r}\left(\frac{1-\nu_i^2}{\pi E_i} + \frac{1-\nu_j^2}{\pi E_j} \right)^{-1} \tag{17}$$

where ν_l and E_l are the Poisson's ratio and the Young's modulus associated to each surface and r is the radius of the impacting sphere. Equation (16) is valid for impact conditions, in which the contacting velocities are lower than the propagation speed of elastic waves, i.e., $\dot{\delta}^{(-)} \le 10^{-5}\sqrt{E/\rho}$.

The contact forces between the node and the surface include friction forces modeled using Coulomb friction. The dynamic friction forces in the presence of sliding are given by

$$\mathbf{f}^{friction} = -\mu_d \, f_d \, (\left|\mathbf{f}_k^n\right| / \left|\dot{\mathbf{q}}_k\right|) \dot{\mathbf{q}}_k \tag{18}$$

where μ_d is the dynamic friction coefficient, and $\dot{\mathbf{q}}_k$ is the velocity of point k. The dynamic correction coefficient f_d is expressed as

$$f_d = \begin{cases} 0 & \text{if} \quad \left|\dot{\mathbf{q}}_k\right| \le v_0 \\ \left(\left|\dot{\mathbf{q}}_k\right| - v_0\right) / \left(v_1 - v_0\right) & \text{if} \quad v_0 \le \left|\dot{\mathbf{q}}_k\right| \le v_1 \\ 1 & \text{if} \quad \left|\dot{\mathbf{q}}_k\right| \ge v_1 \end{cases} \tag{19}$$

The dynamic correction factor prevents that the friction force changes direction for almost null values of the nodal tangential velocity, which would be perceived by the integration algorithm as a response with high frequency contents, forcing it to dramatically reduce the time step size.

The friction model represented by equation (18) does not account for the adherence between the node and the contact surface. The interested reader is referred to the work of Wu, Yang and Haug (1984) where stiction and sliding in multibody dynamics is discussed.

VEHICLE AND OCCUPANTS INTEGRATED SIMULATION

The complete vehicle presented in Fig. 1 is modeled in this work using the methodology briefly described. The model includes all moving components of the vehicle, including the suspension systems and wheels, and it also includes a tire model (Ambrósio, Nikravesh and Pereira, 1990). The vehicle rollover has been extensively analyzed with the purpose of studying the rollbar cage influence in the vehicle stability and its structural integrity. There the rollbar cage is modeled as a nonlinear flexible body experiencing large plastic deformations. Here, the rollbar cage deformation is not included in the model though its deformations are implicitly described by the force contact model.

Two experimental tests of the vehicle with three Hybrid III dummies have been carried at the Transportation Research Center of Ohio (1985, 1986), being an overview of the footage obtained shown in Fig. 14. The outcome of the experimental test has been used to validate the vehicle model used here (Ambrósio, Nikravesh and Pereira, 1990).

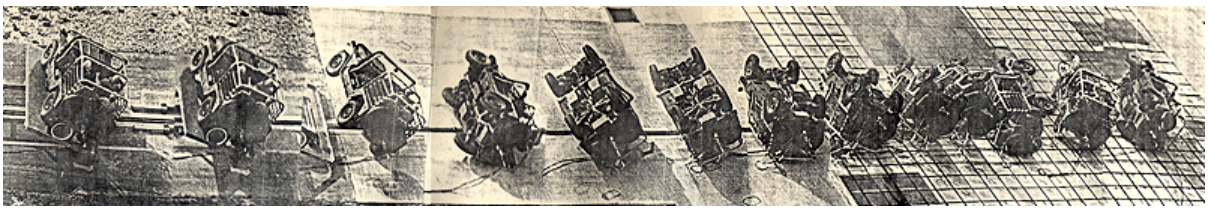

Fig. 14 – View of the experimental test for the truck rollover

Three occupants, with a 50%tile, are also modeled and integrated with the vehicle such a way that these are seated in rigid seats. The two occupants in the front of the vehicle have shoulder and lap seat belts, described with the model proposed by Laananen, Bolukbasi and Coltman (1983), while the occupant seated in the back of the vehicle has no seatbelt. The initial positions of the occupants correspond to a normally seated driver, a front passenger that is bent to check out the 'glove compartment', according to the position reconstructed and shown in Fig. 12, and a rear occupant with a 'relaxed' position, also reconstructed and presented in Fig. 12.

The vehicle and occupants are simulated here in a rollover situation described in Fig. 15. The initial conditions of the simulations correspond to experimental conditions where the vehicle moves on a cart with a lateral velocity of 13.41 m/s (30 mph) until the impact with a water-filled decelerator system occurs. The vehicle is ejected with an roll angle of 23 degrees. The initial velocity of the vehicle, when ejected, is approximately 11.75 m/s (25 m.p.h.) in the Y direction while the angular roll velocity is 1.5 rad/s.

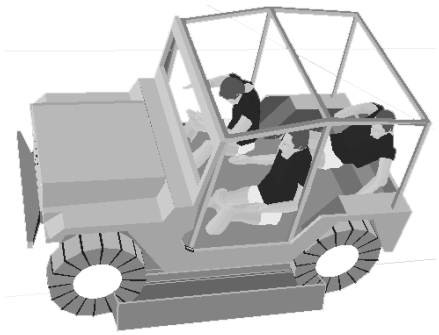

Fig. 15 – Initial position of the vehicle and occupants for the rollover

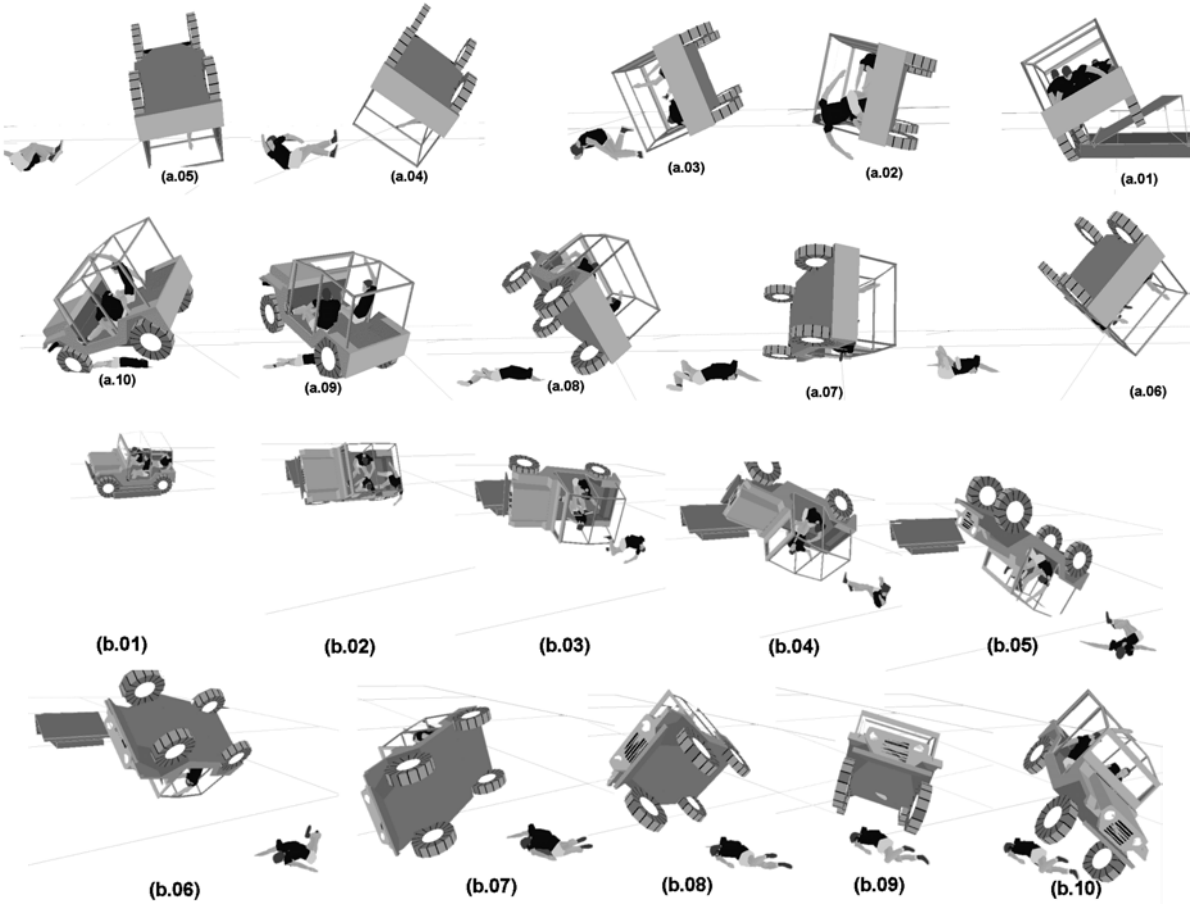

Fig. 16 – Two views of the outcome of the rollover simulation of a vehicle with three occupants

The results of this simulation are pictured in Fig. 16, where several frames of the animation of the vehicle rollover with occupants are presented, as observed from two different points of view. It is noticeable in these sequences that the vehicle first impacts the ground with its left tires. At this point the rear occupant is ejected. The rollover motion of the vehicle proceeds with an increasing angular velocity, mainly due to the ground - tire contact friction forces. The occupants in the front of the vehicle are hold in place by the seat belts. Upon continuing its roll motion, the vehicle impacts the ground with its rollbar cage, while the ejection of the rear occupant is complete. Bouncing from the inverted position the vehicle completes another half turn and impacts the ground with the tires again.

The HICs for all occupants largely exceed 1000. The Severity Index, in Fig. 17, indicates a very high probability of fatal injuries for the occupants under the conditions simulated. The accelerations for the occupants heads are presented in Fig. 18, as an illustration of the results that are readily available by using the formulation proposed. Notice that the model has rigid seats, interior trimming for the dashboard, side and floor panels, and that the ground is also considered to be rigid. It is expected that the head accelerations are lower if some compliance is included in the vehicle interior.

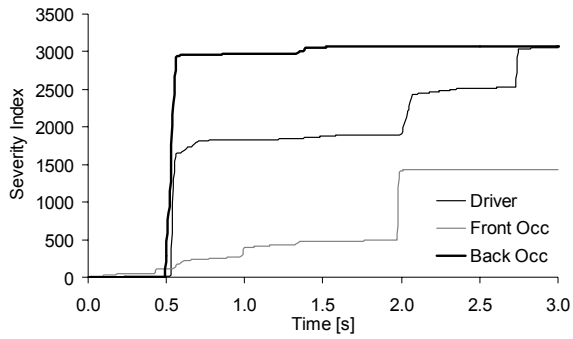

Fig. 17 – Severity Index for the vehicle occupants

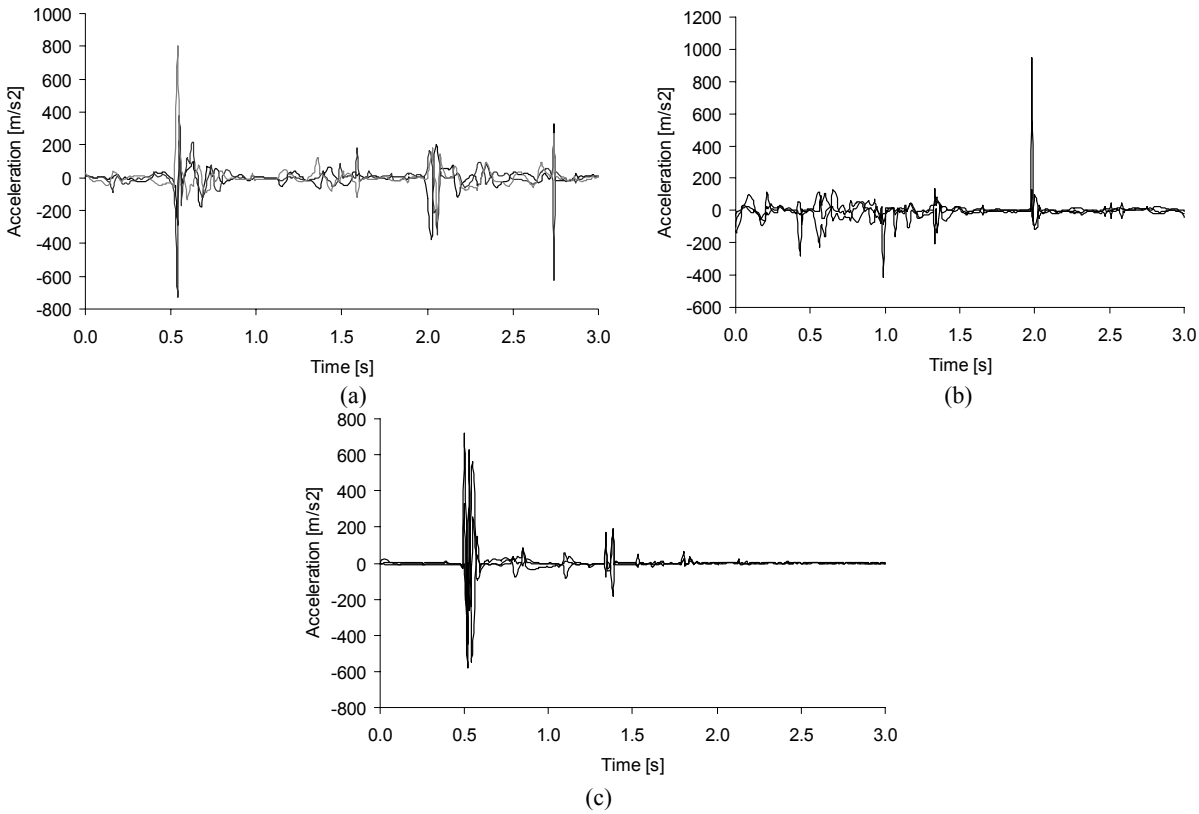

Fig. 18 – Head accelerations during the rollover (a) Driver; (b) Front passenger; (c) Back passenger

CONCLUSIONS

An integrated multibody methodology for the simulation of vehicles with one or more occupants inside, in complex crash scenarios, has been proposed in this work. It has been shown that the formulation presented has all the major ingredients necessary for the simulation of vehicle and occupant impact. Contrary to other applications to vehicle rollover presented in the literature, it is possible to identify in the formulation proposed all the parameters used in the model whose values are ultimately responsible for the large variability of the rollover simulation results. To support the definition of the initial conditions for the biomechanical models a procedure for the spatial reconstruction of biomechanical systems is also proposed in this work. The formulation is based in the existence of a whole body response biomechanical model and uses the Direct Linear Transformations to evaluate the initial positions of a given set of anatomical points. Special care is used in the reconstruction process in order to obtain the system initial positions and velocities consistent with the kinematic constraints. The application of the vehicle and occupants in a rollover crash scenario showed the feasibility of the models and the realism of the evaluation of the occupants' initial positions. Though the vehicle model used in the rollover simulation is fully validated, the results obtained for the kinematics of the biomechanical model lack validation, as they do not correspond to any situation experimentally analyzed in great detail. Nevertheless, provided that the vehicle model can include airbags and/or intelligent restraint systems, the models proposed and the techniques associated to them are valuable tools to evaluate the performance of such systems in face of out-of-position occupants. Moreover, due to the ease and flexibility in reconstructing different out-of-position occupants' initial conditions, the methodologies proposed are also suitable to evaluate the sensitivity of the smart systems developed to the change in occupants' positions.

ACKNOWLEDGEMENTS

The work reported was supported by Fundação para a Ciência e Tecnologia through the project PRAXIS/P/EME 14040/98, entitled *Human Locomotion Biomechanics Using Advanced Mathematical Models and Optimization Procedures*

REFERENCES

ADAMS User Manual, Mechanical Dynamics, Ann Arbor, Michigan, 1998.

Addel-Aziz, Y. and Karara, H., Direct linear transformation from comparator coordinates into object space coordinates in close-range photogrammetry, *Proceedings of the Symposium on Close-range Photogrammetry*, Falls Church, Virginia, 1971, 1-18.

Ambrósio, J.A.C., Nikravesh, P.E. and Pereira, M.S., Crashworthiness Analysis of a Truck, *J. of Mathematical Computer Modelling*, **14**, 1990, 959-964.

Ambrósio, J.A.C., Rigid and Flexible Multibody Dynamics Tools for the Simulation of Systems Subjected to Contact and Impact Conditions, *European Journal of Solids A/Solids*, **19**, S23-S44, 2000.

Allard, P., Stokes, I. and Blanchi, J., *Three-Dimensional Analysis of Human Movement*, Human Kinetics, Urbana-Champagne, Illinois, 1995.

Celigueta, J., Multibody simulation of the human body motion in sports, *Proceedings of the XIV International Symposium on Biomechanics in Sports*, (J. Abrantes, Ed.) Lisboa, Portugal: FMH Editions, 1996, 81-94

Day, T. and Garvey, J.T., Applications and Limitations of 3-Dimensional Vehicle Rollover Simulation, *SAE Paper 2000-01-0852*, 2000.

Hearn, D. and Baker, P., *Computer graphics*, 2nd edition, Prentice-Hall, Englewood Cliffs, New Jersey, 1994.

Jalon, J. G. and Bayo, E., *Kinematic and Dynamic Simulation of Mechanical Systems – The Real-Time Challenge*, Springer-Verlag, Berlim, Germany, 1994.

Laananen, D.H., Bolukbasi, A.O. and Coltman, J.W., *Computer Simulation of an Aircraft Seat and Occupant in a Crash Environment: Volume 1*, Technical Report DOT/FAA/CT-82/33-I, US Department of Transportation, Federal Aviation Administration, Atlantic City, New Jersey, 1983.

Lankarani, H.M. and Nikravesh, P.E., Continuous Contact Force Models for Impact Analysis in Multibody Systems, *Nonlinear Dynamics*, **5**, 1994, 193-207.

Lankarani, H.M., Ma, D. and Menon, R., Impact dynamics of multibody mechanical systems and application to crash responses of aircraft occupant/structure, In *Computer Aided Analysis Of Rigid And Flexible Mechanical Systems*, (M. Pereira and J. Ambrósio, Eds.), NATO ASI Series E. Vol. 268, Kluwer Academic Publishers: Dordrecht, Netherlands, 1995, 239-265.

MADYMO User's manual vs. 4.0, TNO: The Hague, the Netherlands, 1996.

Nigg, B. and Herzog, W., *Biomechanics of the Musculo-skeletal System*, John Wiley & Sons, New York, 1999.

Parenteau, C., Gopal, M. and Viano, D., Near and Far-Side Adult Front Passenger Kinematics in a Vehicle Rollover, *SAE Paper 2001-01-0176*, 2001.

Pereira, M., Gim, G., Lankarani, H. and Nikravesh, P., *Technical Data and a Plastic Hinge Model For M151-A2 Rollbar Cage*, Technical Report CAEL-87-3, Computer-Aided Engineering Laboratory, Department of Aerospace and Mechanical Engineering, University of Arizona, Tucson, Arizona, 1987.

Renfroe, D.A., Partain, J. and Lafferty, J., Modeling of Vehicle Rollover and Evaluation of Occupant Injury Potential Using MADYMO, *SAE Paper 980021*, Society of Automotive Engineers International Congress and Exposition, Detroit, Michigan, 1998.

Silva, M., Ambrósio, J. and Pereira, M., A Multibody Approach To The Vehicle And Occupant Integrated Simulation, *Int. Journal of Crashworthiness*, **2**(1), 1997, 73-90.

Silva, M., Ambrósio, J. and Pereira, M., Biomechanical Model with Joint Resistance for Impact Simulation, *Multibody System Dynamics*, **1**(1), 1997, 65-84.

Silva, M. and Ambrósio, J. , Kinematic Data Consistency in the Inverse Dynamic Analysis of Biomechanical Systems, *Multibody System Dynamics*, (accepted for publication), 2001.

Winmer, A., Einfluß der belastungsgeschwindigkeit auf das festigkeits- und verformungsverhalten am beispiel von kraftfarhzeugen, *ATZ*, **77**(10), 1977, 281-286.

Winter, D. A., *The biomechanics and motor control of human gait: Normal, elderly and pathological*, 2nd Ed., University of Waterloo Press, 1991.

Wu, S., Yang, S. and Haug, E., *Dynamics of Mechanical Systems with Coulomb Friction, Stiction, Impact and Constraint Addition-Deletion*, Technical Report 84-19, Center for Computer Aided Design, University of Iowa, Iowa City, Iowa, 1984.

…, *30 mph Rollover Test of an AM General Model M151-A2 ¼ Ton Jeep*, The Transportation Research Center of Ohio, Test Report, November 1985.

…, *30 mph Rollover Test of an AM General Model M151-A2 ¼ Ton Jeep*, The Transportation Research Center of Ohio, Test Report, January 1986.